Improving Transformer Protection

54th Annual
MINNESOTA POWER SYSTEMS CONFERENCE
November 6–8, 2018

BECKWITH ELECTRIC CO. INC.

Wayne Hartmann
VP, Customer Excellence
Senior Member, IEEE

Wayne Hartmann
Senior VP, Customer Excellence

whartmann@beckwithelectric.com
904-238-3844

Beckwith Electric's top strategist for delivering innovative technology messages to the Electric Power Industry through technical forums and industry standard development.

- Before joining Beckwith Electric, performed in Application, Sales and Marketing Management capacities at PowerSecure, General Electric, Siemens Power T&D and Alstom T&D.
- Provides strategies, training and mentoring to Beckwith Electric personnel in Sales, Marketing, Creative Technical Solutions and Engineering.
- Key contributor to product ideation and holds a leadership role in the development of course structure and presentation materials for annual and regional protection & control Seminars.
- Senior Member of IEEE, serving as a Main Committee Member of the Power System Relaying and Control Committee for over 25 years.
- Chair Emeritus of the IEEE PSRCC Rotating Machinery Subcommittee ('07-'10).
- Contributed to numerous IEEE Standards, Guides, Reports, Tutorials and Transactions, delivered Tutorials IEEE Conferences, and authored and presented numerous technical papers at key industry conferences.
- Contributed to McGraw-Hill's "Standard Handbook of Power Plant Engineering."

Abstract

- Power transformers play a critical role in process continuity
- Transformers are subject to:
  - Internal short circuits
  - External short circuits
  - Abnormal operating conditions
- Challenges:
  - CT remanence & high X/R ratio
  - Inrush
  - Overexcitation
  - Ground fault sensitivity

Transformers: T & D

Transformers: T & D

Transformers: T & D

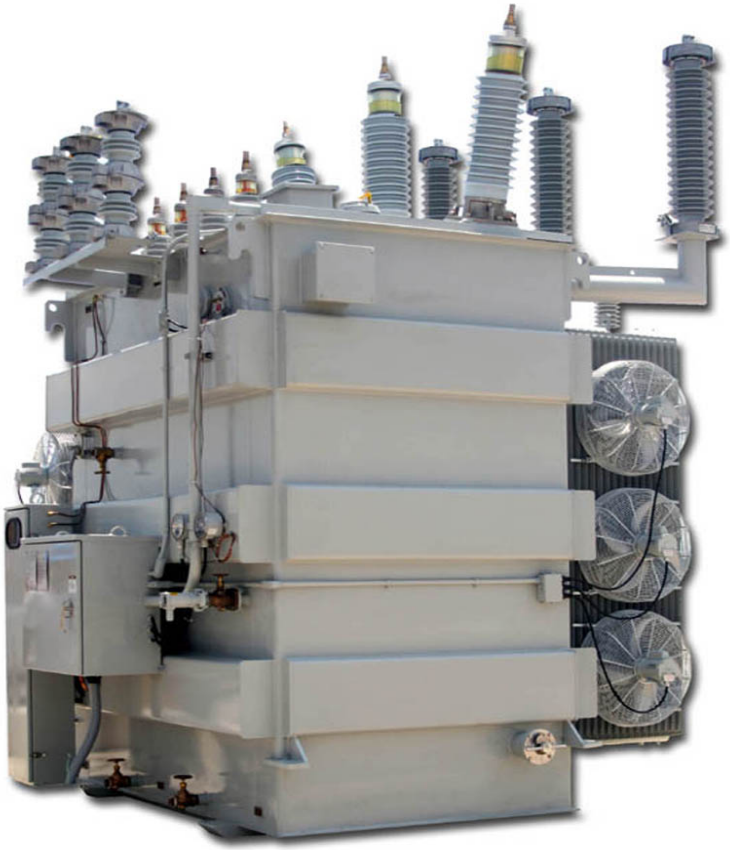

Transformer: GSU Step Up

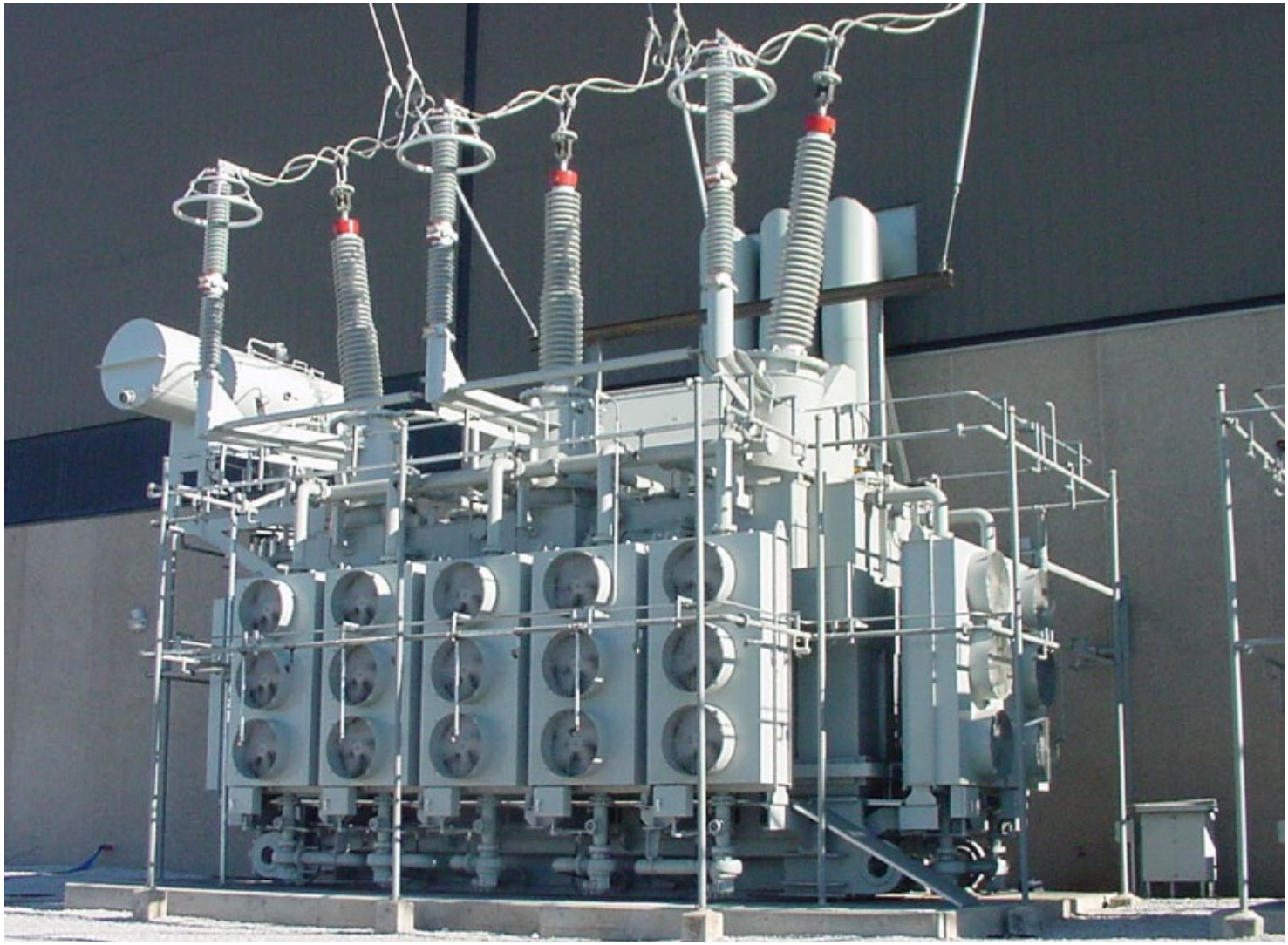

FAILURE!

FAILURE!

FAILURE!

Remanence & X/R Ratio: CT Saturation

- Remenant Flux
  - Magnetization left behind in CT iron after an external magnetic field is removed
  - Caused by current interruption with DC offset
- High X/R Ratio
  - Increases the time constant of the CT saturation period
- CT saturation is increased by the above factors working alone or in combination with:
  - Large fault or through-fault current (causes high secondary CT voltage)

IEEE CT Saturation Calculator

- The IEEE Power System Relaying & Control Committee (PSRCC) developed a simplified model for CT saturation
  - Includes the major parameters that should be considered.
- Examples of saturation with a 2-node bus

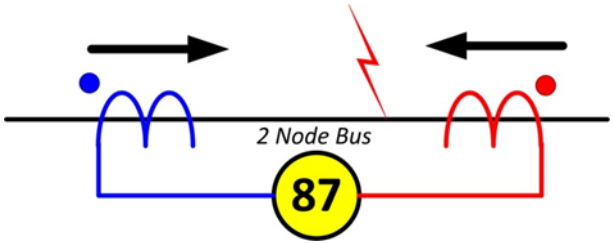

Fig. 1A: Internal Fault

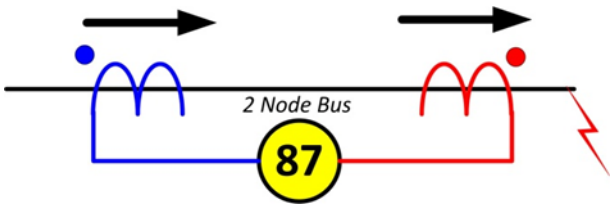

Fig. 1B: External Fault

CT Saturation [1]

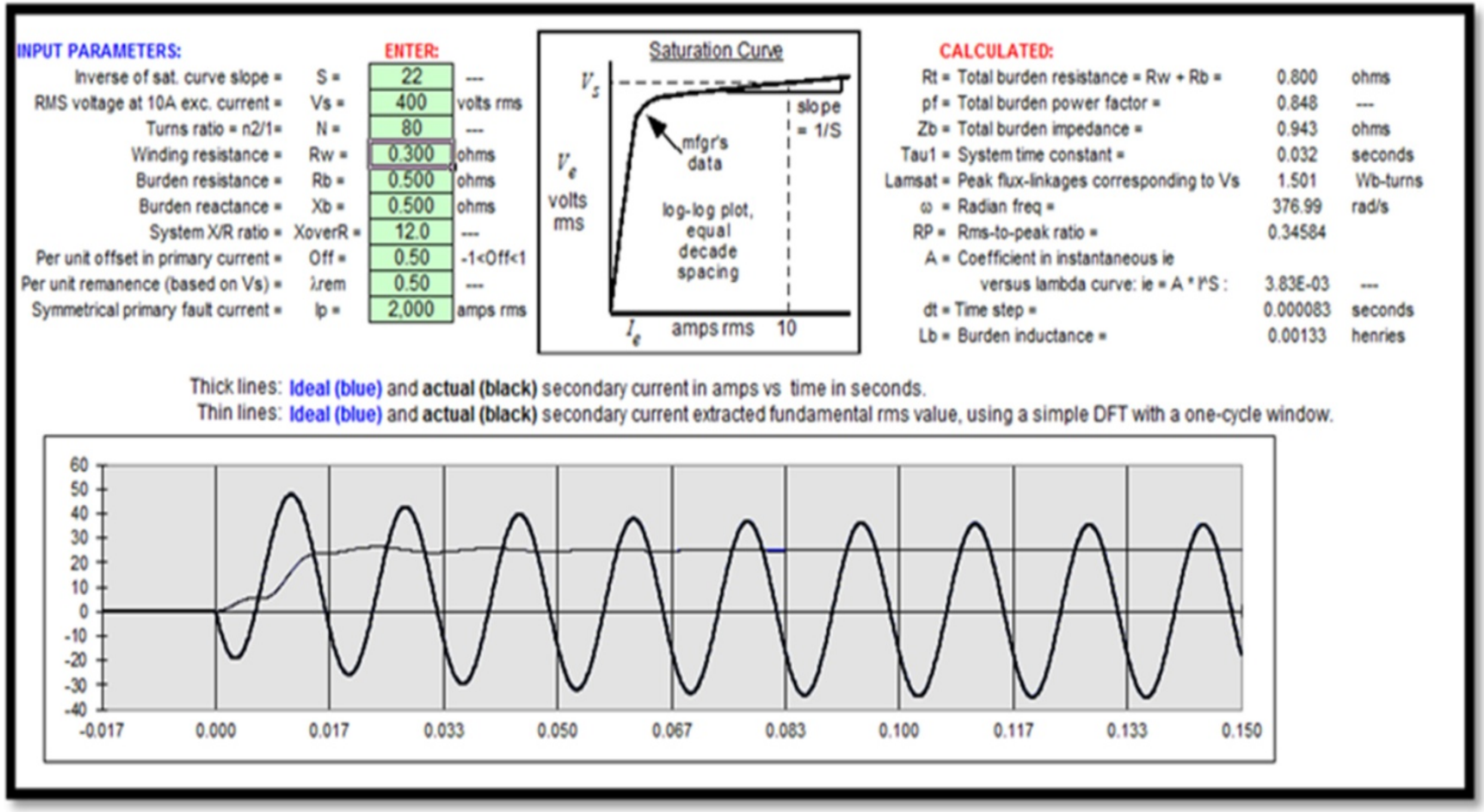

Fig. 2: 400:5, C400, R=0.5, Offset = 0.5, 2000A

CT Saturation [2]

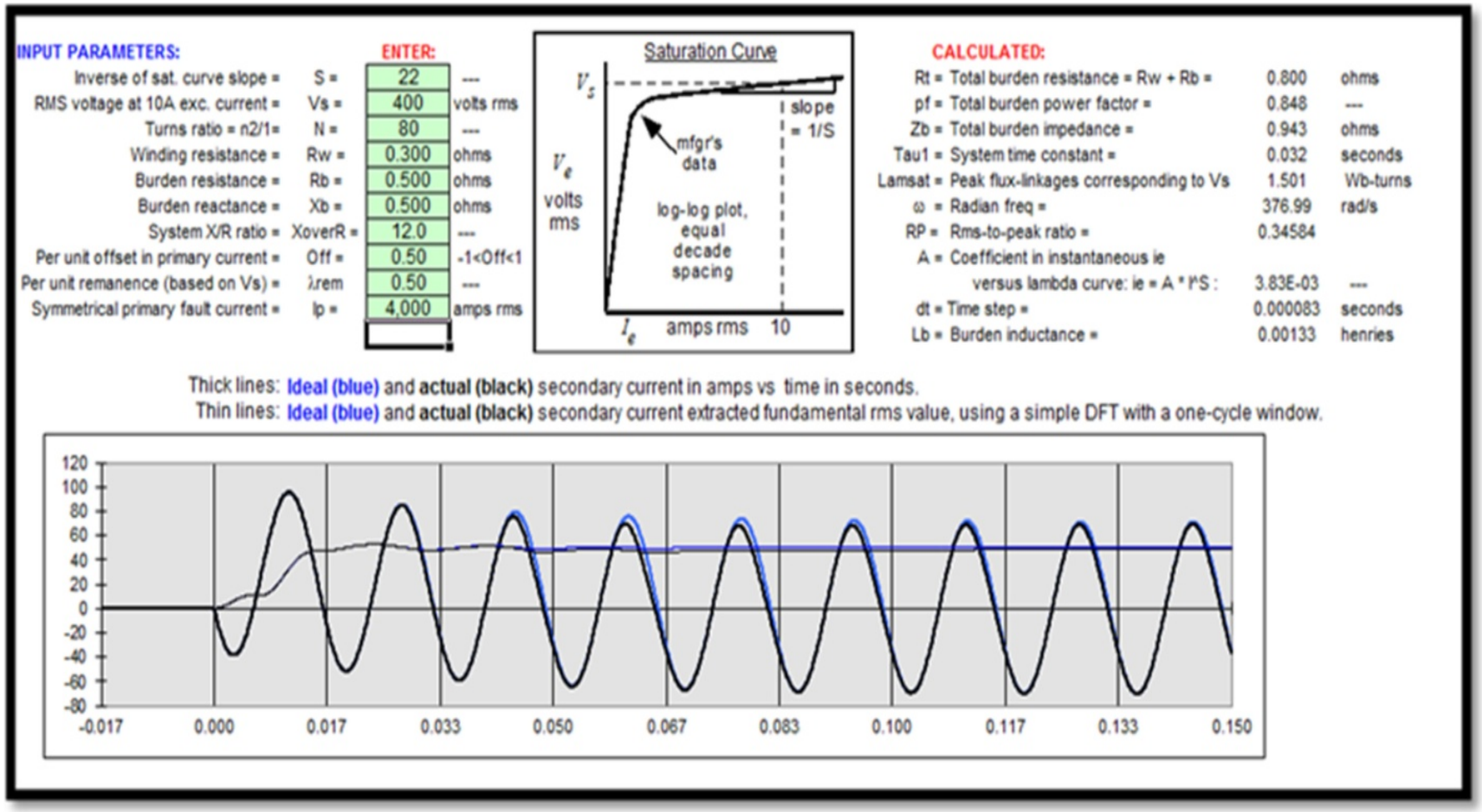

Fig. 3: 400:5, C400, R=0.5, Offset = 0.5, 4000A

CT Saturation [3]

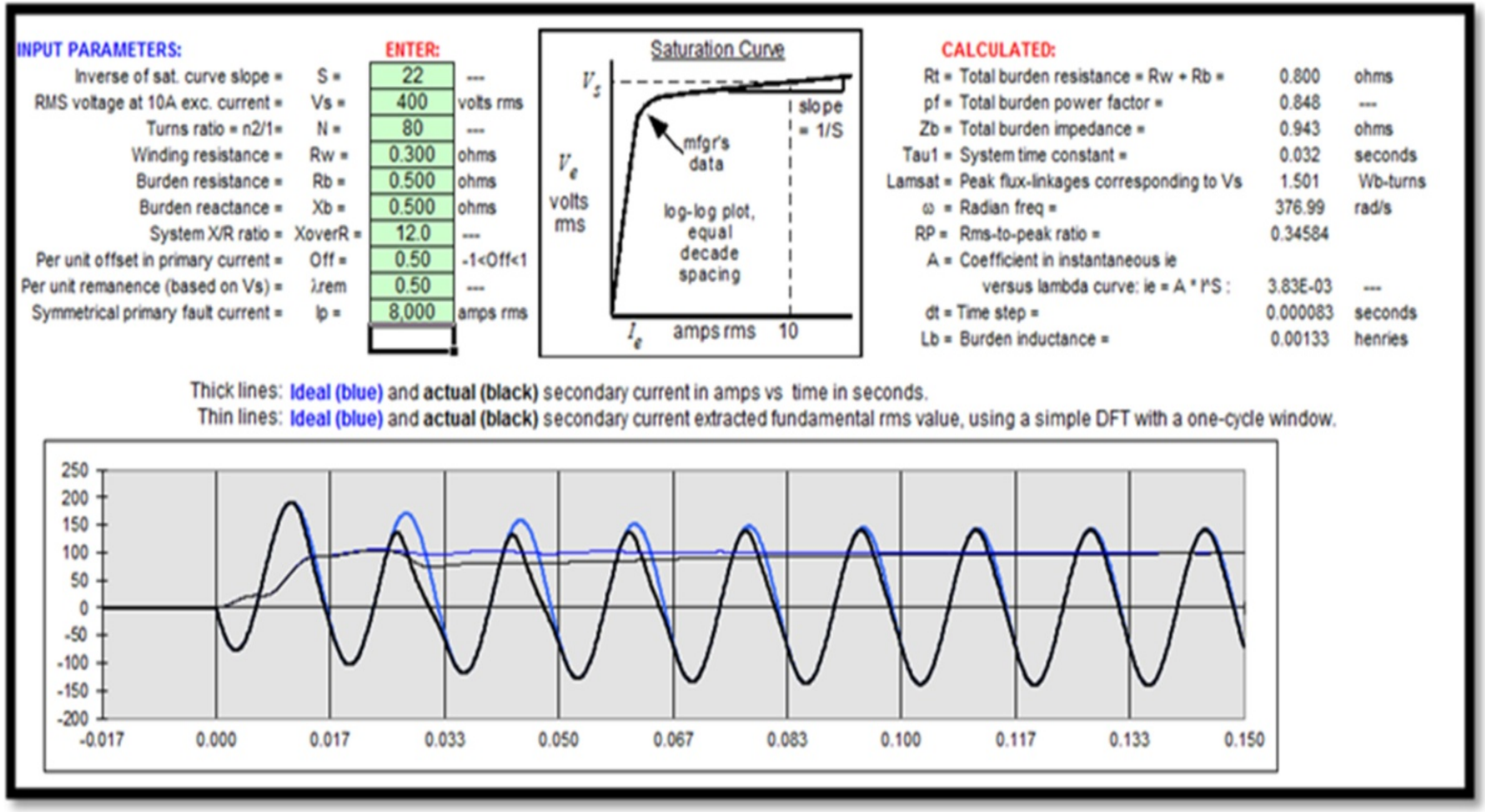

Fig. 4: 400:5, C400, R=0.5, Offset = 0.5, 8000A

CT Saturation [4]

INPUT PARAMETERS:

		ENTER:	
Inverse of sat. curve slope =	S =	22	---
RMS voltage at 10A exc. current =	Vs =	400	volts rms
Turns ratio = n2/1=	N =	80	---
Winding resistance =	Rw =	0.300	ohms
Burden resistance =	Rb =	0.500	ohms
Burden reactance =	Xb =	0.500	ohms
System X/R ratio =	XoverR =	12.0	---
Per unit offset in primary current =	Off =	0.75	-1<Off<1
Per unit remanence (based on Vs) =	λrem	0.50	---
Symmetrical primary fault current =	Ip =	8,000	amps rms

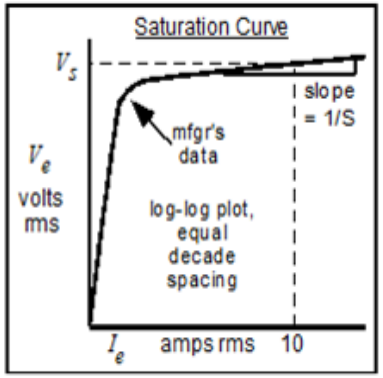

CALCULATED:

Rt =	Total burden resistance = Rw + Rb =	0.800	ohms
pf =	Total burden power factor =	0.848	---
Zb =	Total burden impedance =	0.943	ohms
Tau1 =	System time constant =	0.032	seconds
Lamsat =	Peak flux-linkages corresponding to Vs	1.501	Wb-turns
ω =	Radian freq =	376.99	rad/s
RP =	Rms-to-peak ratio =	0.34584	
A =	Coefficient in instantaneous ie versus lambda curve: ie = A * l^S :	3.83E-03	---
dt =	Time step =	0.000083	seconds
Lb =	Burden inductance =	0.00133	henries

Thick lines: **Ideal (blue)** and **actual (black)** secondary current in amps vs time in seconds.
Thin lines: **Ideal (blue)** and **actual (black)** secondary current extracted fundamental rms value, using a simple DFT with a one-cycle window.

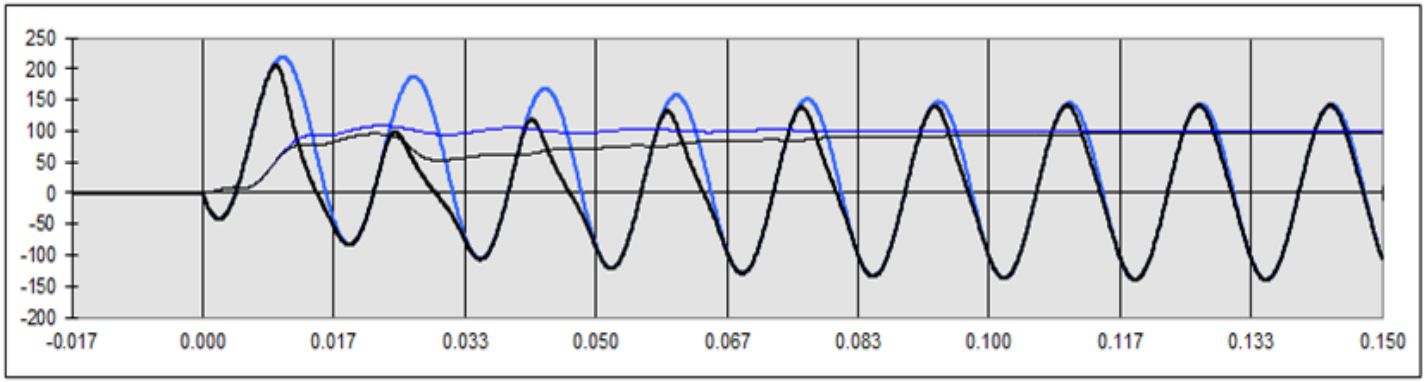

To determine the effect of saturation on a particular digital relay, one must have "models" for the blocks shown below:

Fig. 5: 400:5, C400, R=0.5, Offset = 0.75, 8000A

CT Saturation [5]

INPUT PARAMETERS:

		ENTER:	
Inverse of sat. curve slope =	S =	22	---
RMS voltage at 10A exc. current =	Vs =	400	volts rms
Turns ratio = n2/1=	N =	80	---
Winding resistance =	Rw =	0.300	ohms
Burden resistance =	Rb =	0.500	ohms
Burden reactance =	Xb =	0.500	ohms
System X/R ratio =	XoverR =	12.0	---
Per unit offset in primary current =	Off =	0.75	-1<Off<1
Per unit remanence (based on Vs) =	λrem	0.75	---
Symmetrical primary fault current =	Ip =	8,000	amps rms

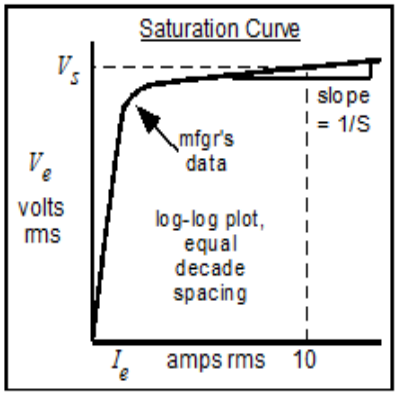

CALCULATED:

Rt =	Total burden resistance = Rw + Rb =	0.800	ohms
pf =	Total burden power factor =	0.848	---
Zb =	Total burden impedance =	0.943	ohms
Tau1 =	System time constant =	0.032	seconds
Lamsat =	Peak flux-linkages corresponding to Vs	1.501	Wb-turns
ω =	Radian freq =	376.99	rad/s
RP =	Rms-to-peak ratio =	0.34584	
A =	Coefficient in instantaneous ie versus lambda curve: ie = A * l^S :	3.83E-03	---
dt =	Time step =	0.000083	seconds
Lb =	Burden inductance =	0.00133	henries

Thick lines: **Ideal (blue)** and **actual (black)** secondary current in amps vs time in seconds.
Thin lines: **Ideal (blue)** and **actual (black)** secondary current extracted fundamental rms value, using a simple DFT with a one-cycle window.

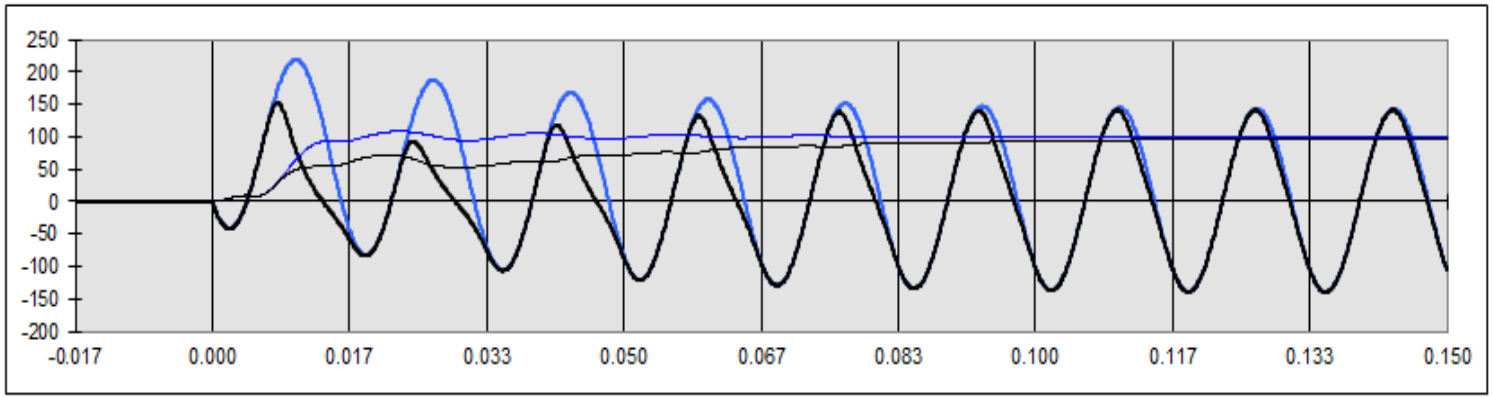

Fig. 6: 400:5, C400, R=0.75, Offset = 0.75, 8000A

Differential Element Quantities

- Restraining versus Operating

$$I_{RES} = \frac{\sum |I_{W1}| + |I_{W2}|}{2}$$

$$I_{OP} = \overrightarrow{I_{W1}} + \overrightarrow{I_{W2}}$$

- Assumptions
  - Rated current (full load): 400A = 1 pu
  - Maximum through or internal fault current = 20X rated = 20pu

Fig	Rated·I	Test·I	Rated/Test·(pu)	%·Diff·(max)	EXT·Op	EXT·Res	INT·Op	INT·Res
2	400	2000	5	0	0	5	11	5
3	400	4000	10	5	0.5	9.75	20.5	9.75
4	400	8000	20	25	5	17.5	36	17.5
5	400	8000	20	45	9	15.5	32	15.5
6	400	8000	20	50	10	15	31	15

Characteristic & Values Plot

- Pick Up: 0.35pu
- Slope 1 Breakpoint: 1.5pu
- Slope 1: 57%
- Slope 2 Breakpoint: 3.0pu
- Slope 2: 200%

➢ Relay elements from different manufacturers use different restraining and operating calculations

➢ Careful evaluation is recommended

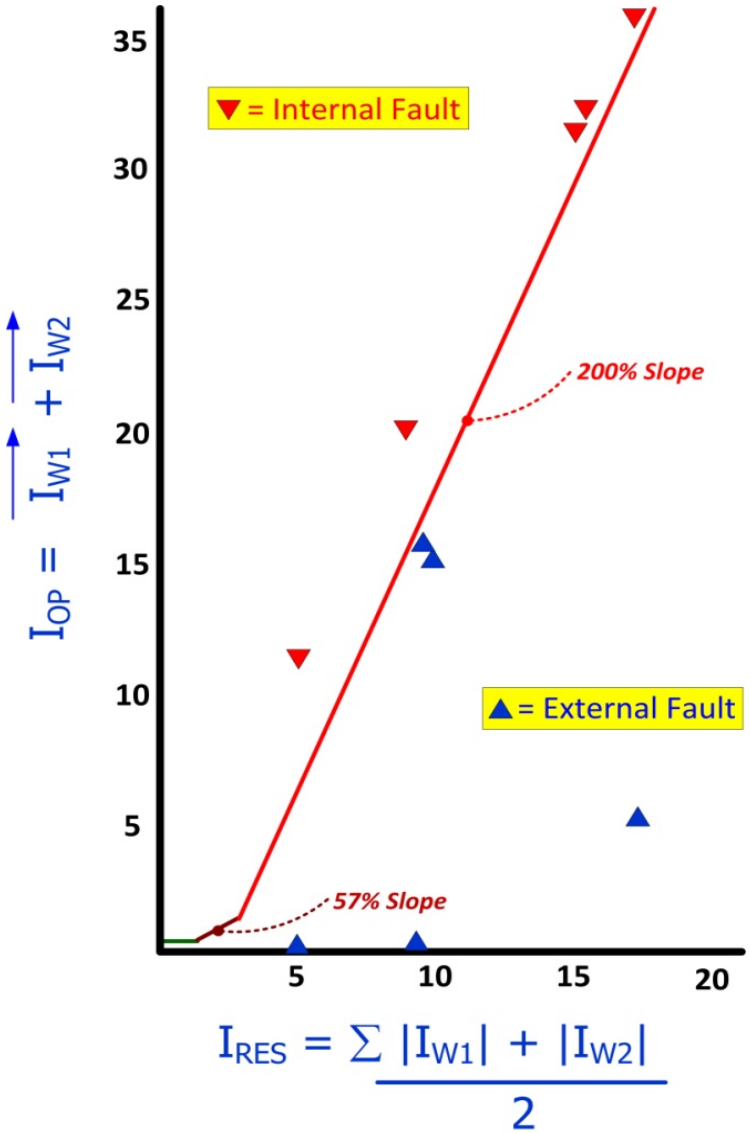

Fig. 7 Modeled Test Plots

Coping with Transformer Inrush

- Initial energizing inrush that occurs when the transformer is energized from the completely deenergized state
- Sympathetic inrush that occurs when an energized transformer undergoes inrush after a neighboring transformer energizes
- Recovery inrush that occurs after a fault occurs and is cleared

Coping with Transformer Inrush

- Inrush current is distinguishable from fault current by the inclusion of harmonic components
- 2nd harmonic restraint has traditionally been applied to prevent undesired tripping of differential elements
- 2nd harmonic quantity depends upon the magnetizing characteristics of the transformer core and residual magnetism present in the core

Coping with Transformer Inrush

- Modern transformers tend to have:
  - Low core losses
  - Very steep magnetizing characteristics
  - Exhibit lower values of 2nd harmonic
- Fortunately, *even* order harmonics are generated during inrush, not only 2nd harmonic
- Use 2nd and 4th harmonic as a restraining quantity for inrush.

$$I_{RES:\,2\text{-}4} = \sqrt{\left(I_{RES:\,2}^{2} + I_{RES:\,4}^{2} \right)}$$

Transformer Inrush Harmonics

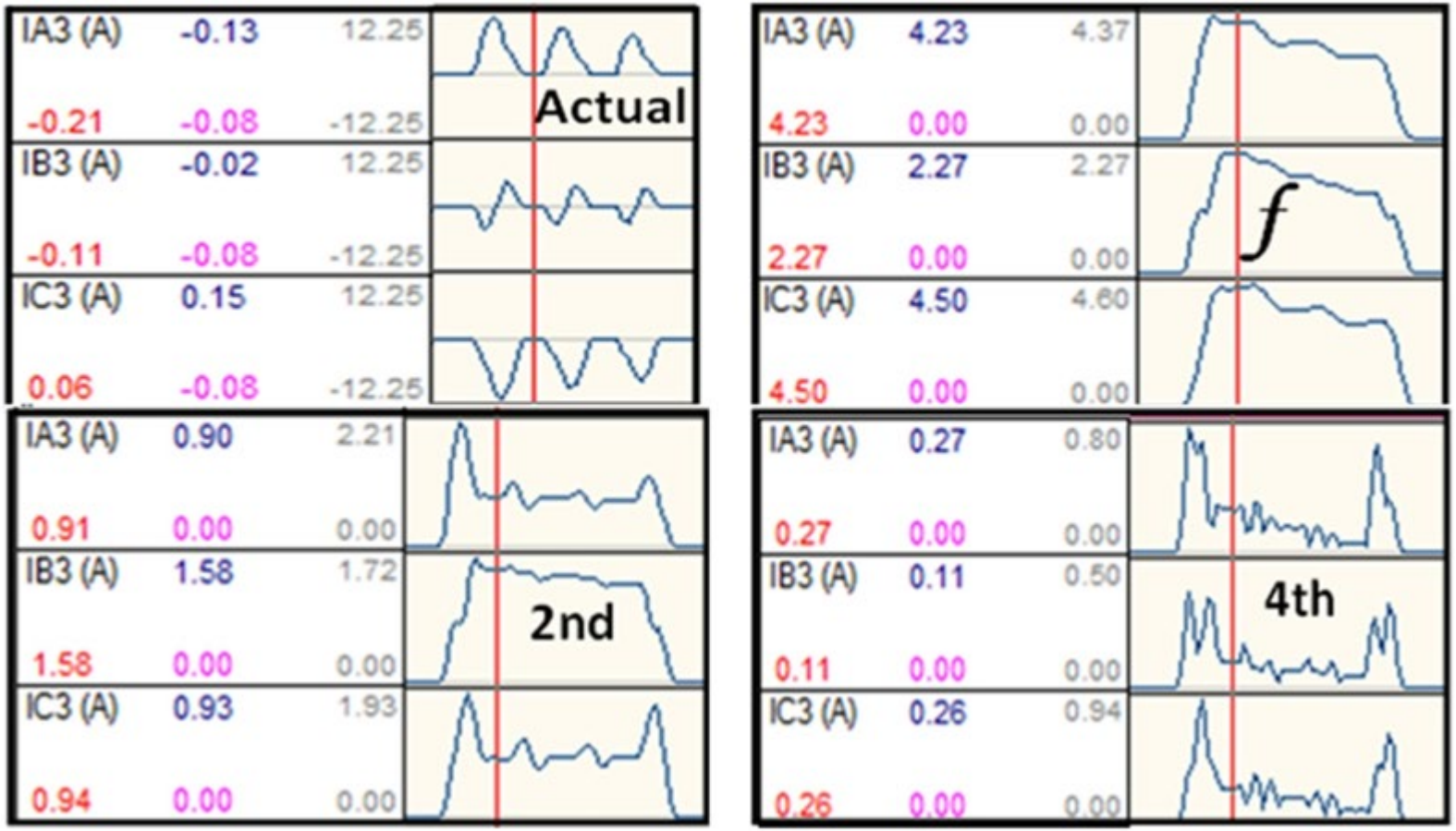

Figs. 8a, b, c, d Inrush Currents:
Actual, Fundamental, 2nd Harmonic and 4th Harmonic Levels
2nd and 4th inrush harmonics are approximately 1/5 the value of the fundamental value.

Transformer Overexcitation Creates Excess Flux

- Occurs whenever the ratio of V/Hz at the secondary terminals of a transformer exceeds:
  - Full Load: 1.05 per unit (PU) on transformer base, 0.8 power factor
  - No Load: 1.1 PU

– Localized overheating and breakdown
  - Core assembly
  - Winding insulation

Coping with Transformer Overexcitation

- Non-laminated components at the ends of the cores begin to heat up because of the higher losses induced in them
- This can cause severe localized overheating in the transformer and eventual breakdown in the core assembly or winding insulation

Overexcitation Causes

- May be caused by system events

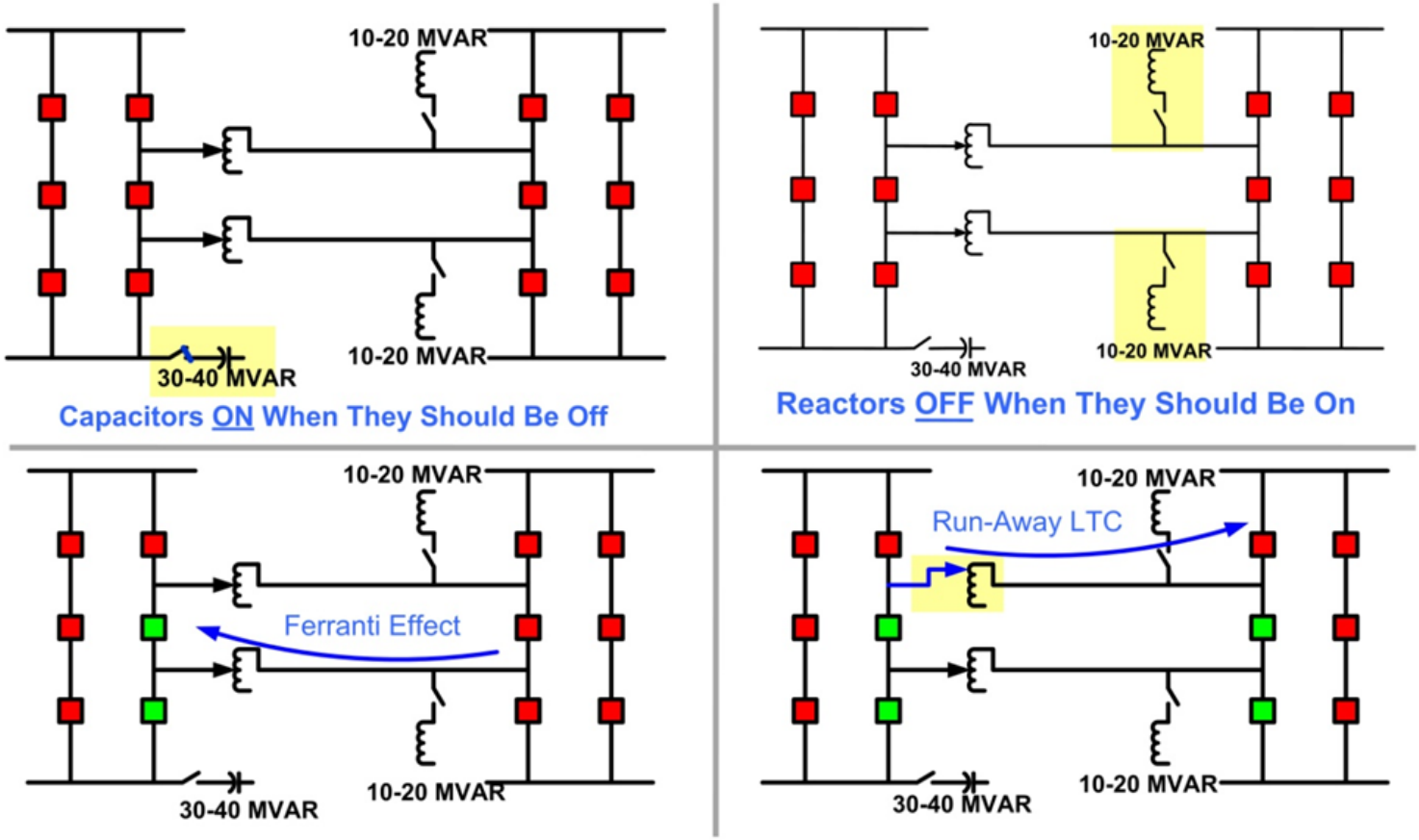

Figs. 9a, b, c, d Overexcitation

Increased V/Hz = Overexcitation = Excess Current

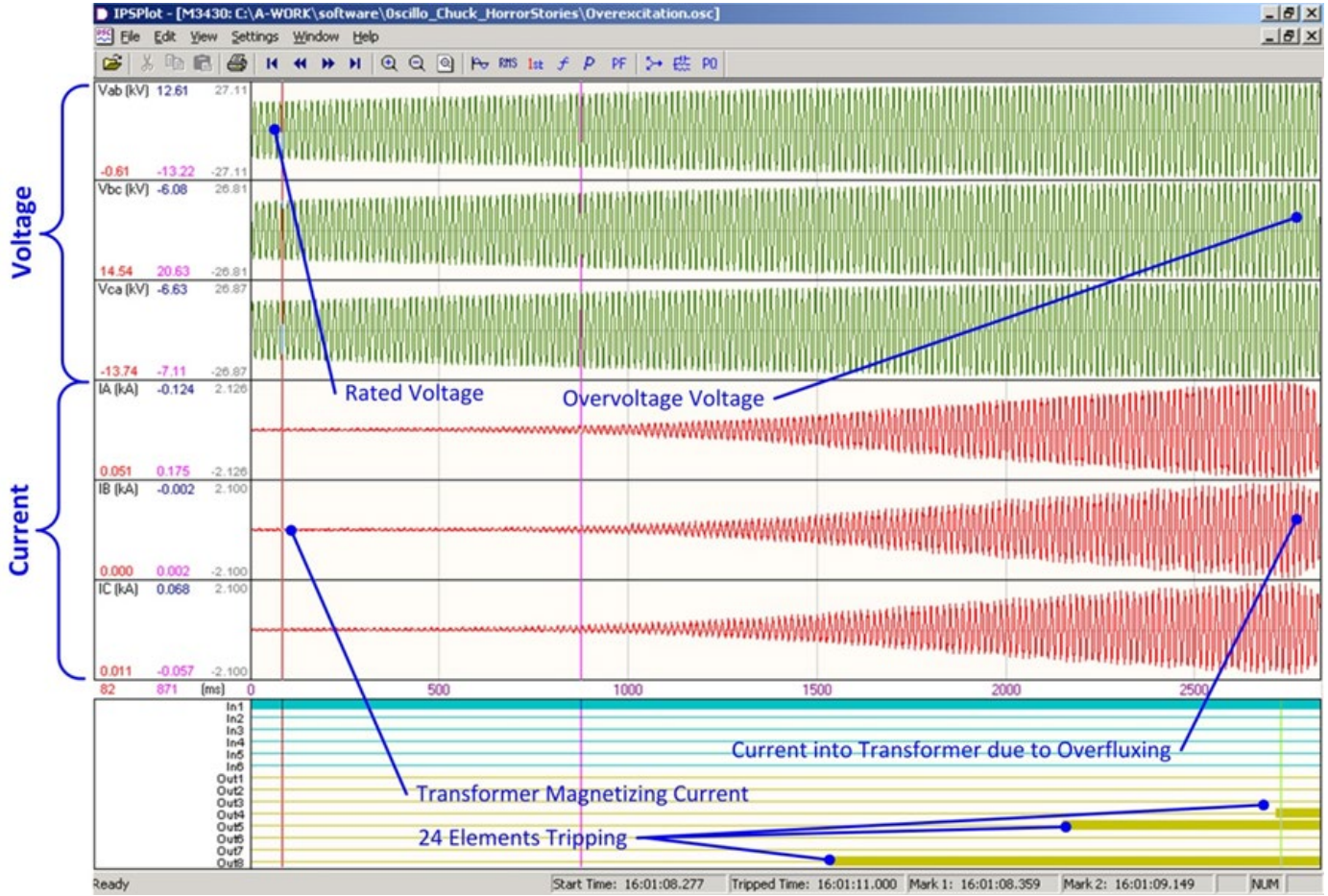

Fig. 10, Overexcitation Event Oscillograph

Overexcitation Harmonics: A Closer Look

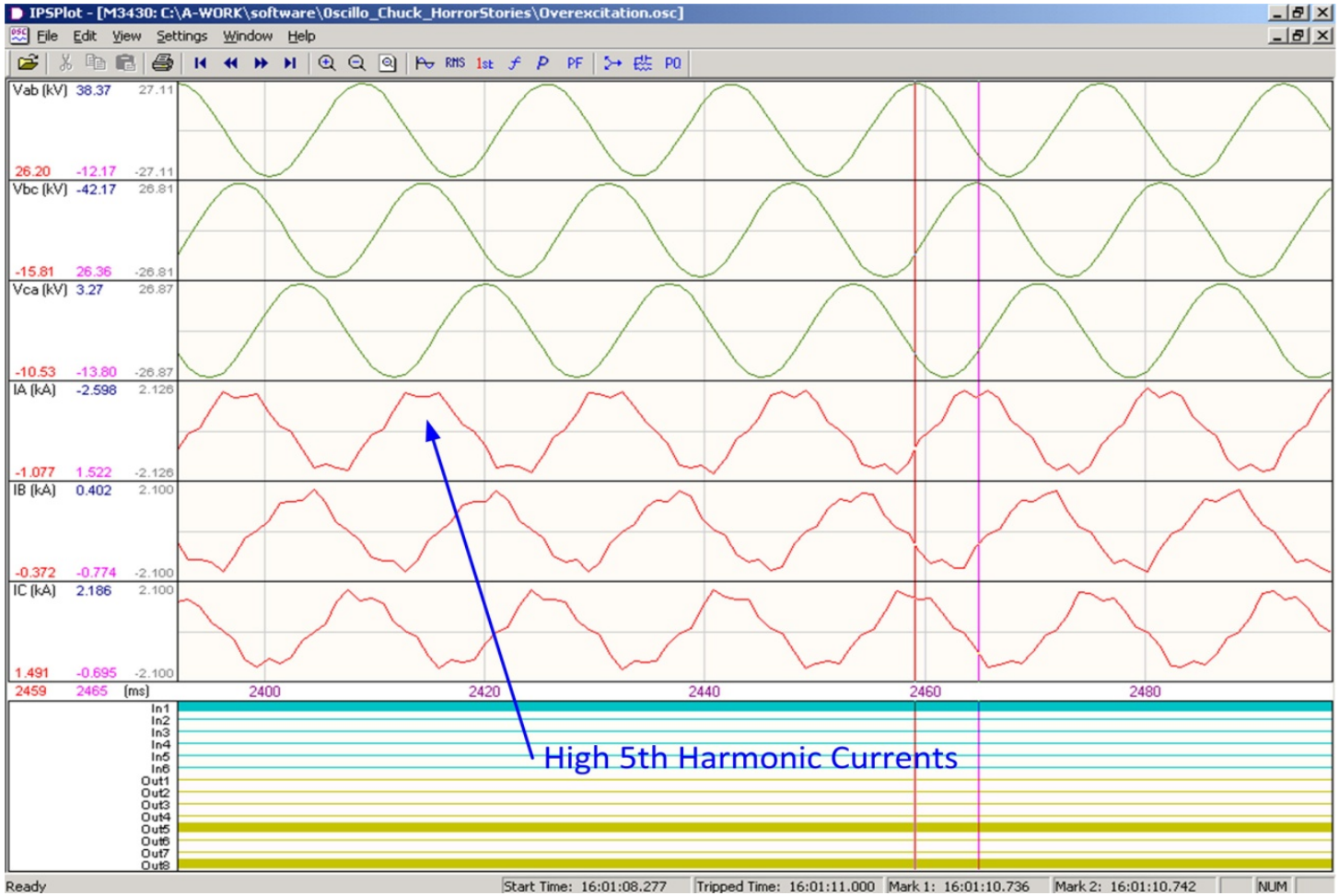

Fig. 11, Overexcitation Event Oscillograph

Overexcitation

- Responds to overfluxing; excessive V/Hz
  - 120V/60Hz = 2 = 1pu
- Constant operational limits
  - ANSI C37.106 & C57.12
    - 1.05 loaded, 1.10 unloaded
  - Inverse time curves typically available for values over the constant allowable level

- **Overfluxing is a <u>voltage</u> and <u>frequency</u> based issue**
- **Overfluxing protection needs to be voltage and frequency based (V/Hz)**
- **Apparatus (transformers and generators) is rated with V/Hz withstand curves and limits – *not* 5th harmonic withstand limits**

Overexcitation vs. Overvoltage

- Overvoltage protection reacts to dielectric limits
  - Exceed those limits and risk punching a hole in the insulation
  - Time is not negotiable

- Overexcitation protection reacts to overfluxing
  - The voltage excursion may be less than the prohibited dielectric limits (overvoltage limit)
  - Overfluxing causes heating
  - Time is not negotiable
  - The excess current cause excess heating
    - Causes cumulative damage the asset
    - If time/level limits violated, may cause a catastrophic failure

Protect Against Overexcitation

- V / Hz levels indicate flux
- V / Hz element for alarm and trip
- Use manufacturer's level and time withstand curves
- Reset timer waits for cooling

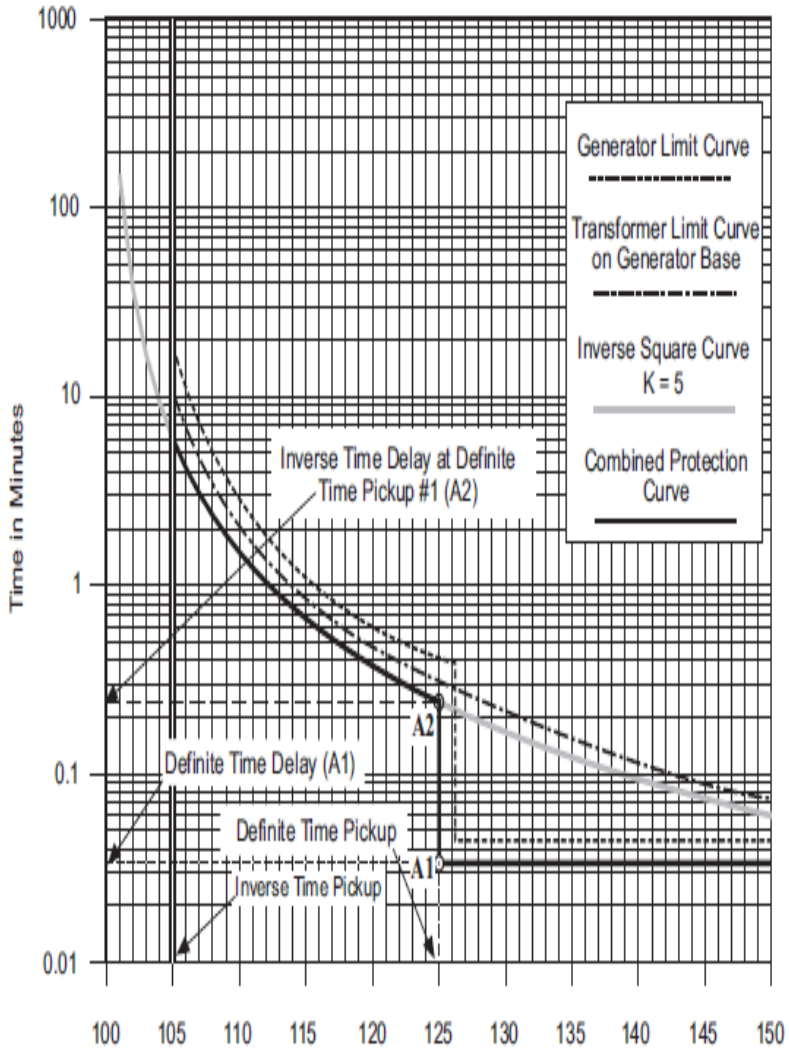

Transformer Overexcitation: 87T Concerns

- For differential protection, 5th harmonic restraint has been used to prevent undesired tripping by blocking the differential element
- Issue with blocking the differential element is if a single-phase fault or two-phase fault occurs in the transformer, and one phase remains unfaulted, the differential element remains blocked.

Transformer Overexcitation: 87T Concerns

- Overexcitation in T&D systems is typically caused by the voltage component of the V/Hz value
- The transformer is more inclined to fault during an overexcitation event as the voltage is higher than rated.
  - It is at this moment that the differential element should not be blocked

Transformer Overexcitation: 87T Concerns

- Improved strategy: Raise the pickup of the differential element during overexcitation
  - Keeps the element secure against undesired tripping
  - Allows the element to quickly respond to an internal fault that occurs during the overexcitation event.

Transformer Overexcitation: 87T Concerns

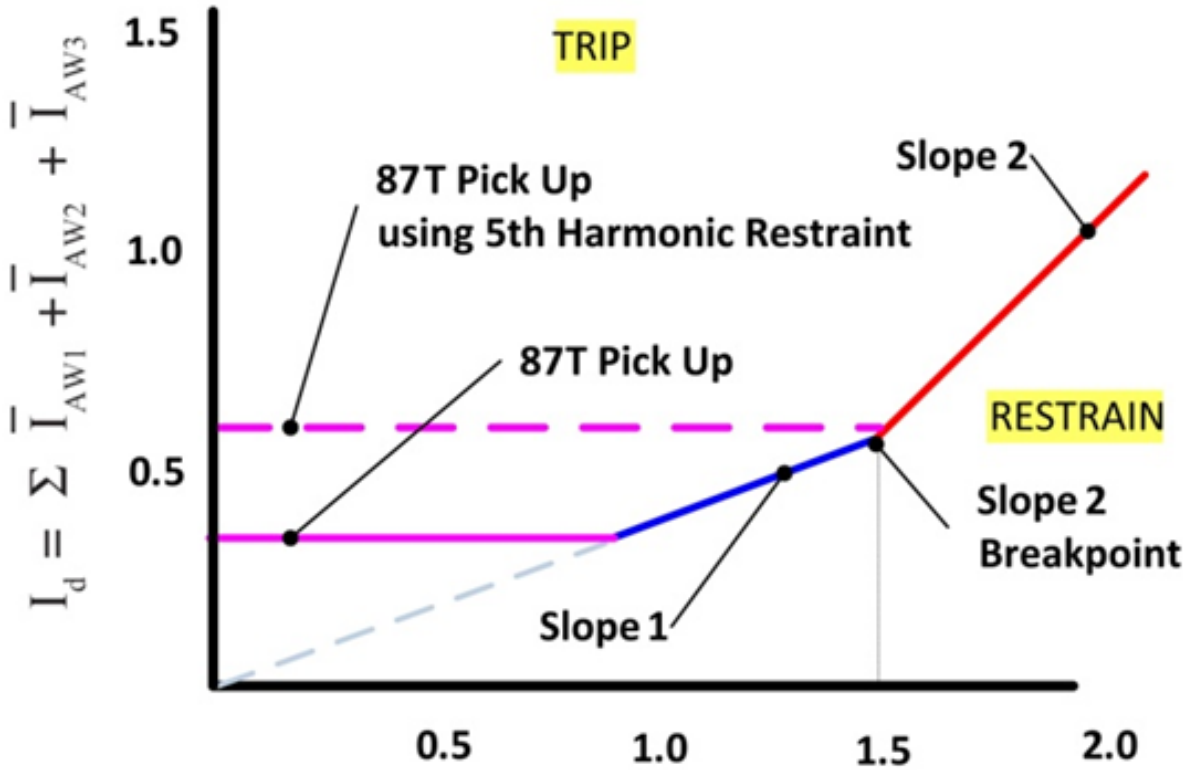

$$I_R = \frac{\Sigma \left| I_{AW1} \right| + \left| I_{AW2} \right| + \left| I_{AW3} \right|}{2}$$

Fig. 12, Overexcitation Event Oscillograph

Ground Fault Security

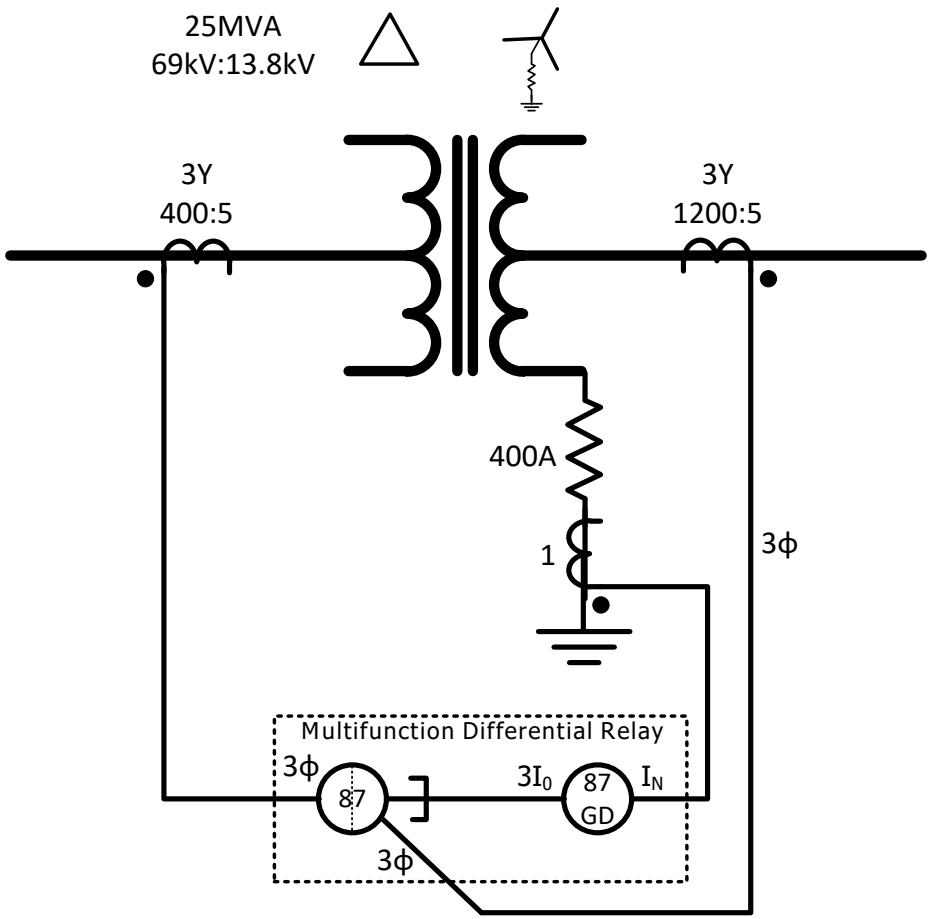

- Low level ground fault current difficult to detect with phase differential
- Ground differential offers far greater sensitivity while remaining secure

Fig. 13, Ground Differential Protection Application

Ground Fault Security

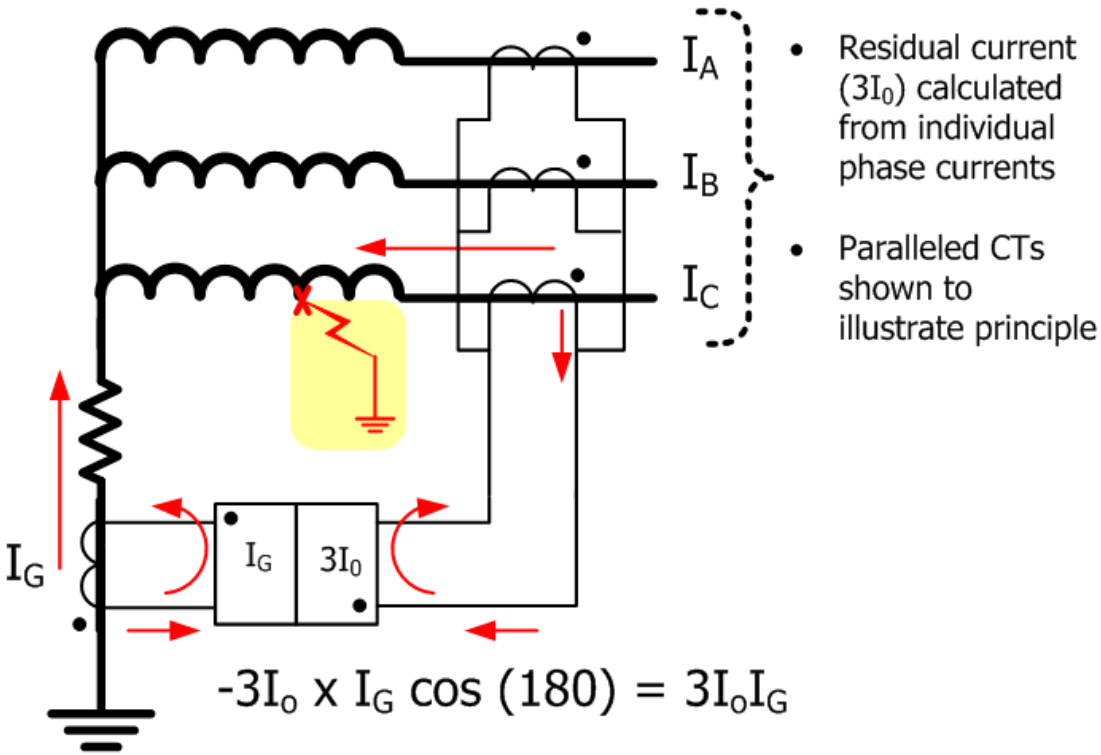

- Residual current ($3I_0$) calculated from individual phase currents
- Paralleled CTs shown to illustrate principle

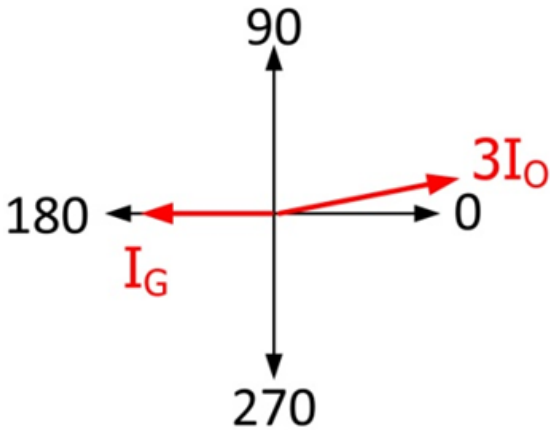

Fig. 14, 87GD with Internal Fault, Double Fed

Ground Fault Security

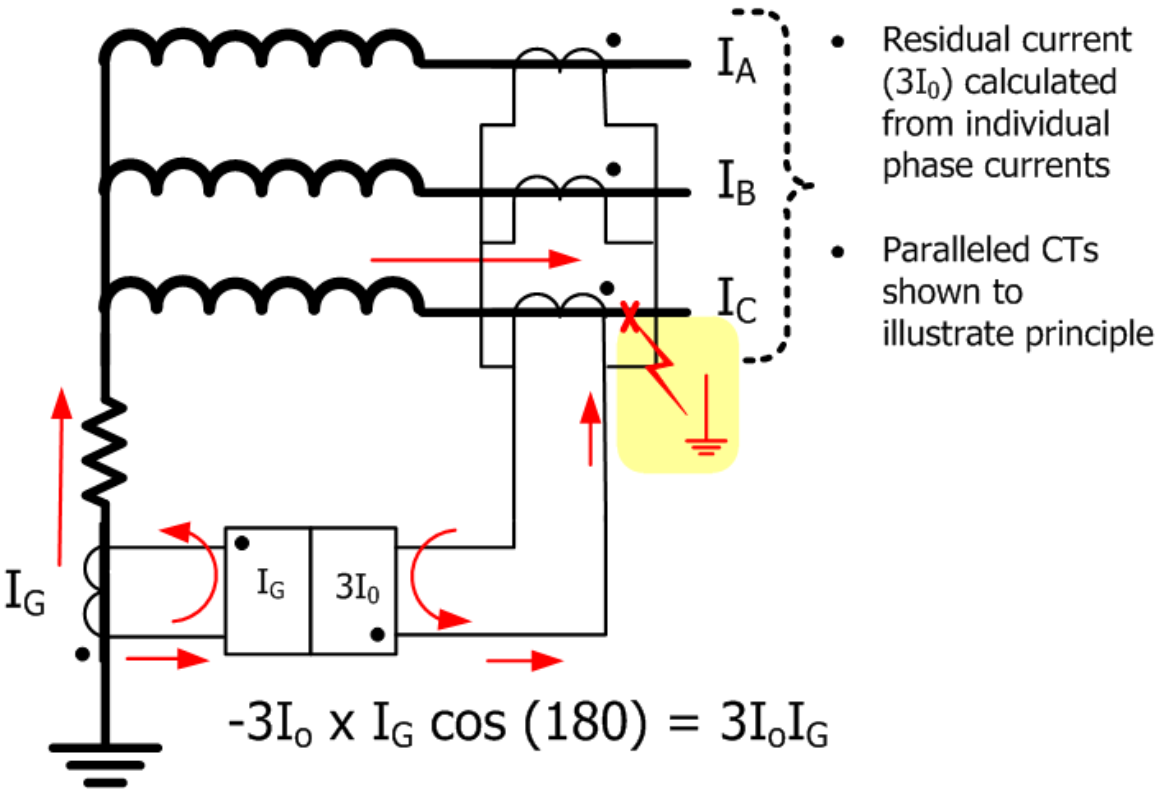

- Residual current ($3I_0$) calculated from individual phase currents
- Paralleled CTs shown to illustrate principle

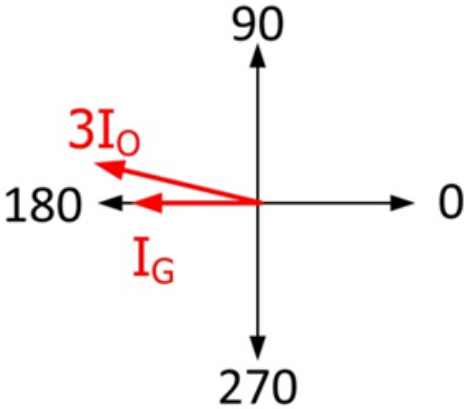

Fig. 15, 87GD with External Through Fault

Ground Fault Security

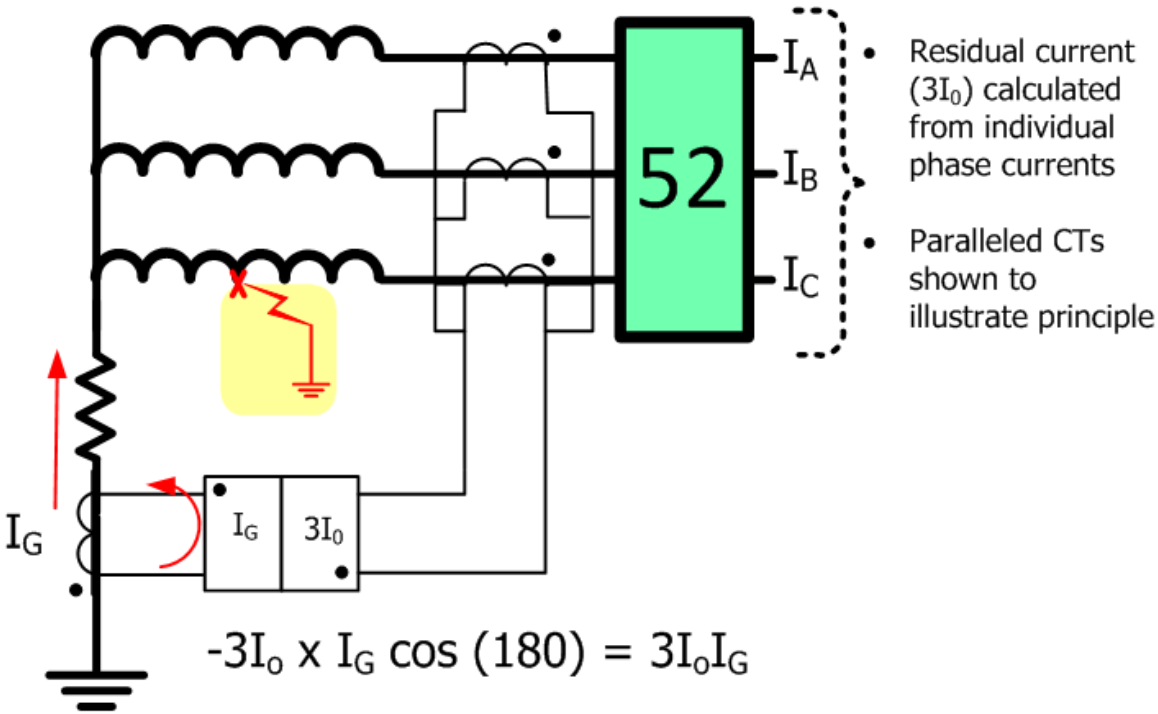

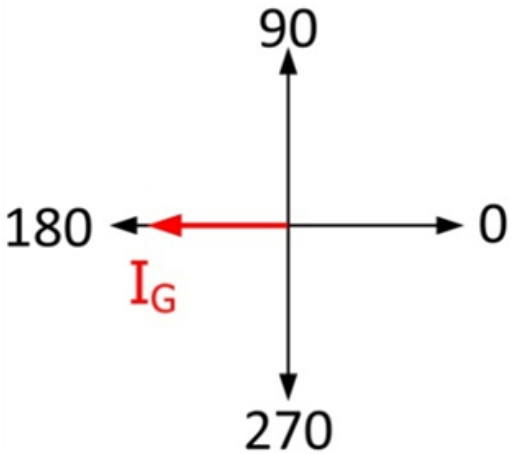

Fig. 16, 87GD with Internal Fault, Single Feed

Through Fault

- Provides protection against cumulative through fault damage
- Typically alarm function

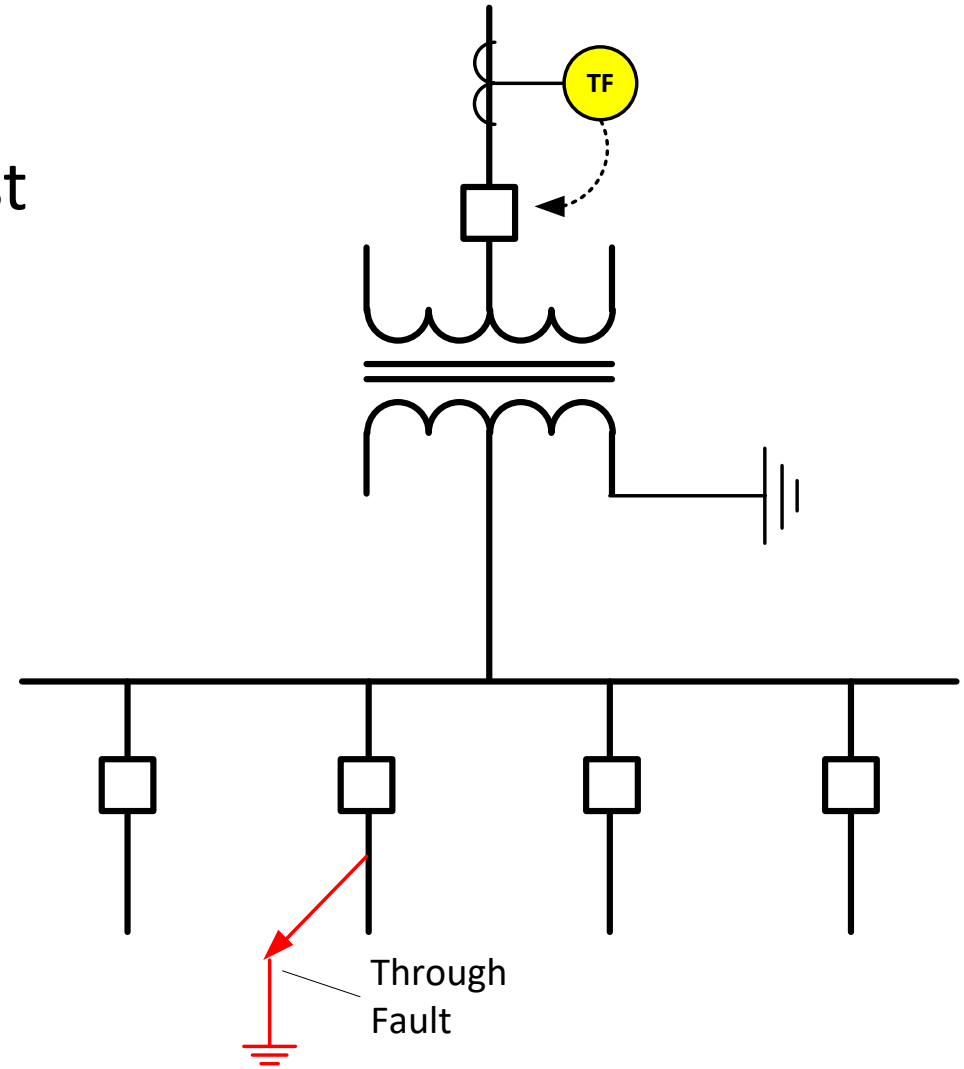

Through Fault

- A transformer is like a motor that does not spin
- There are still forces acting in it
- That is why we care about limiting through-faults

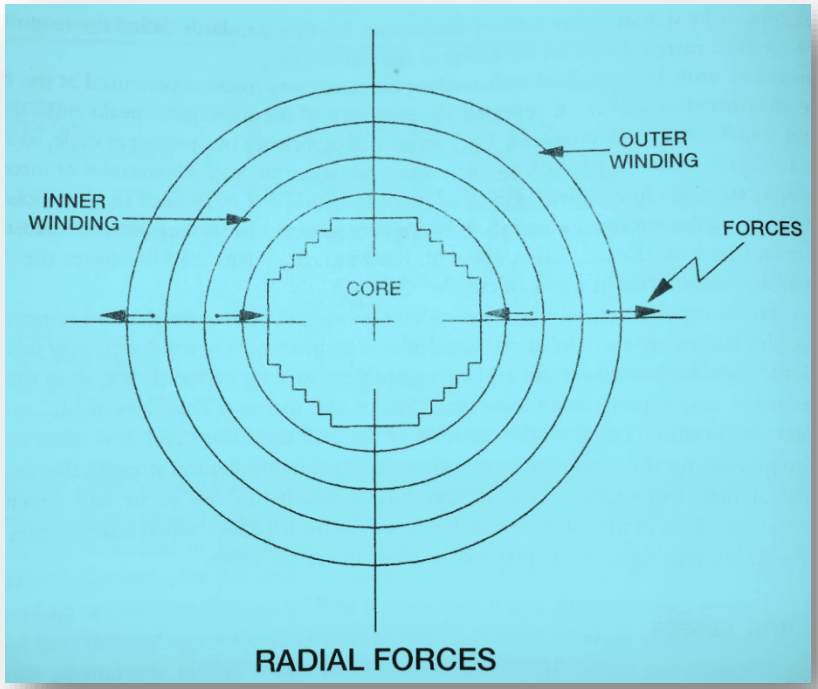

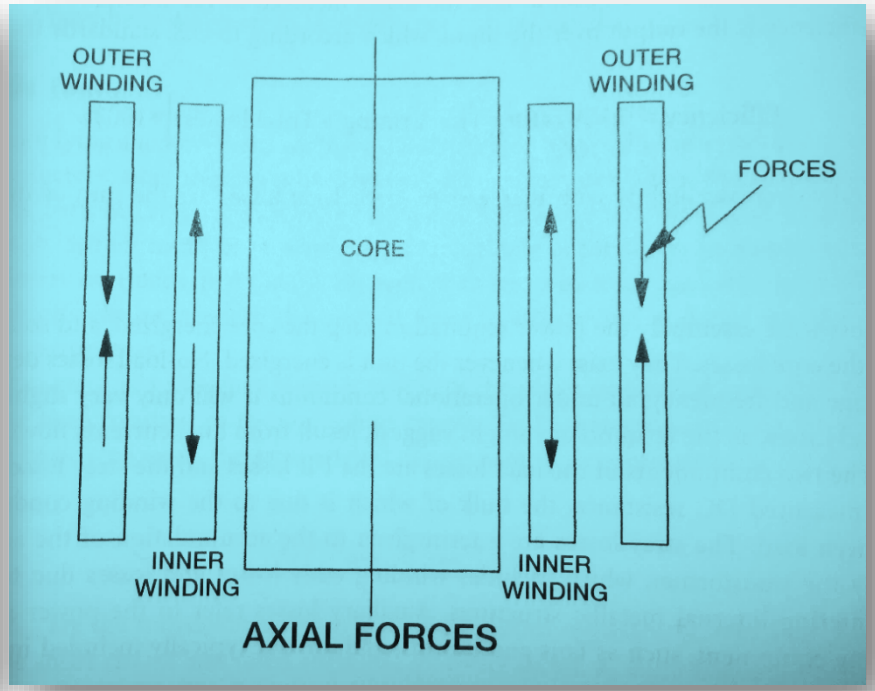

Through-Fault Monitoring

- Protection against heavy prolonged through faults
- Transformer Category

  -IEEE Std. C57.109-1985 Curves

Category	Minimum nameplate (kVA)	
	Single-Phase	Three-Phase
I	5-500	15-500
II	501-1667	501-5000
III	1668-10,000	5001-30,000
IV	Above 10,000	Above 30,000

Through-Fault Damage Mechanisms

- Thermal Limits for prolonged through-faults typically 1-5X rated
  - Time limit of many seconds
- Mechanical Limits for shorter duration through-faults typically greater than 5X rated
  - Time limit of few seconds
- NOTE: Occurrence limits on each Transformer Class Graph

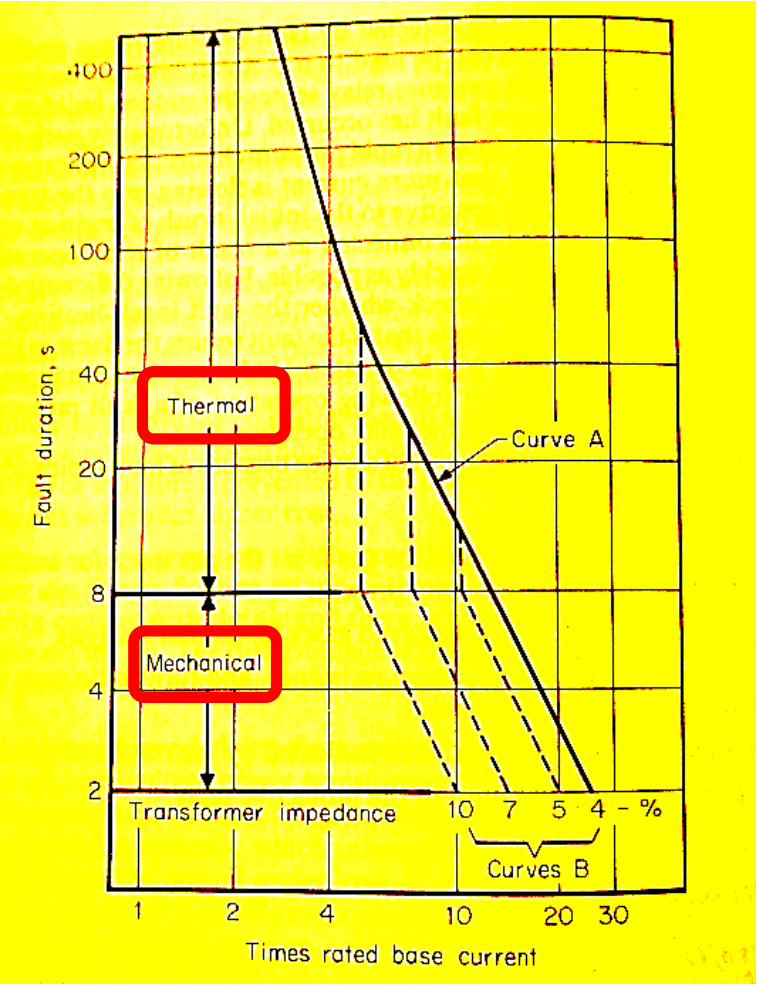

Standard Handbook for Electrical Engineers

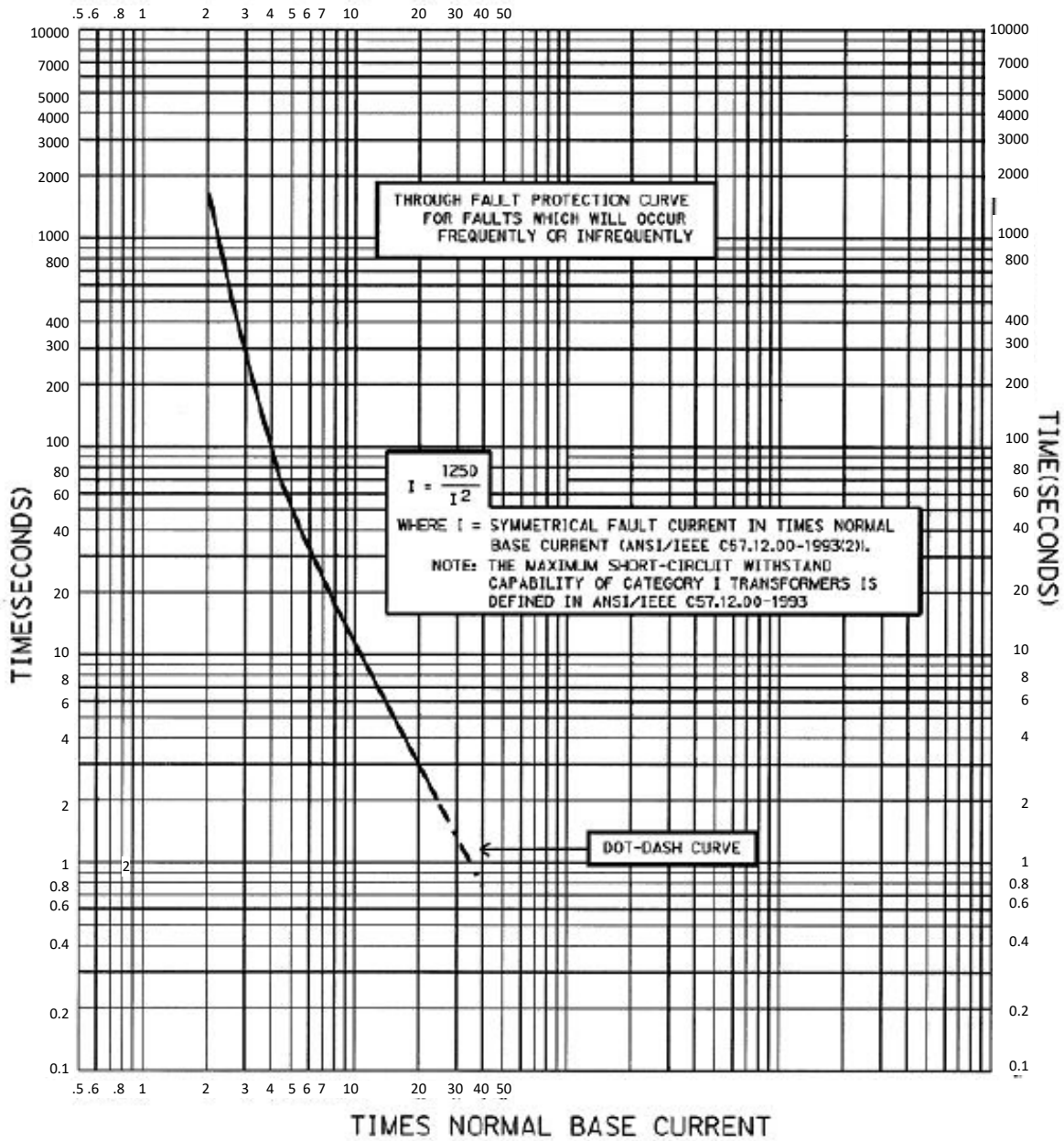

From IEEE C37.91

Through-Fault Category 1 (15 kVA – 500 kVA)

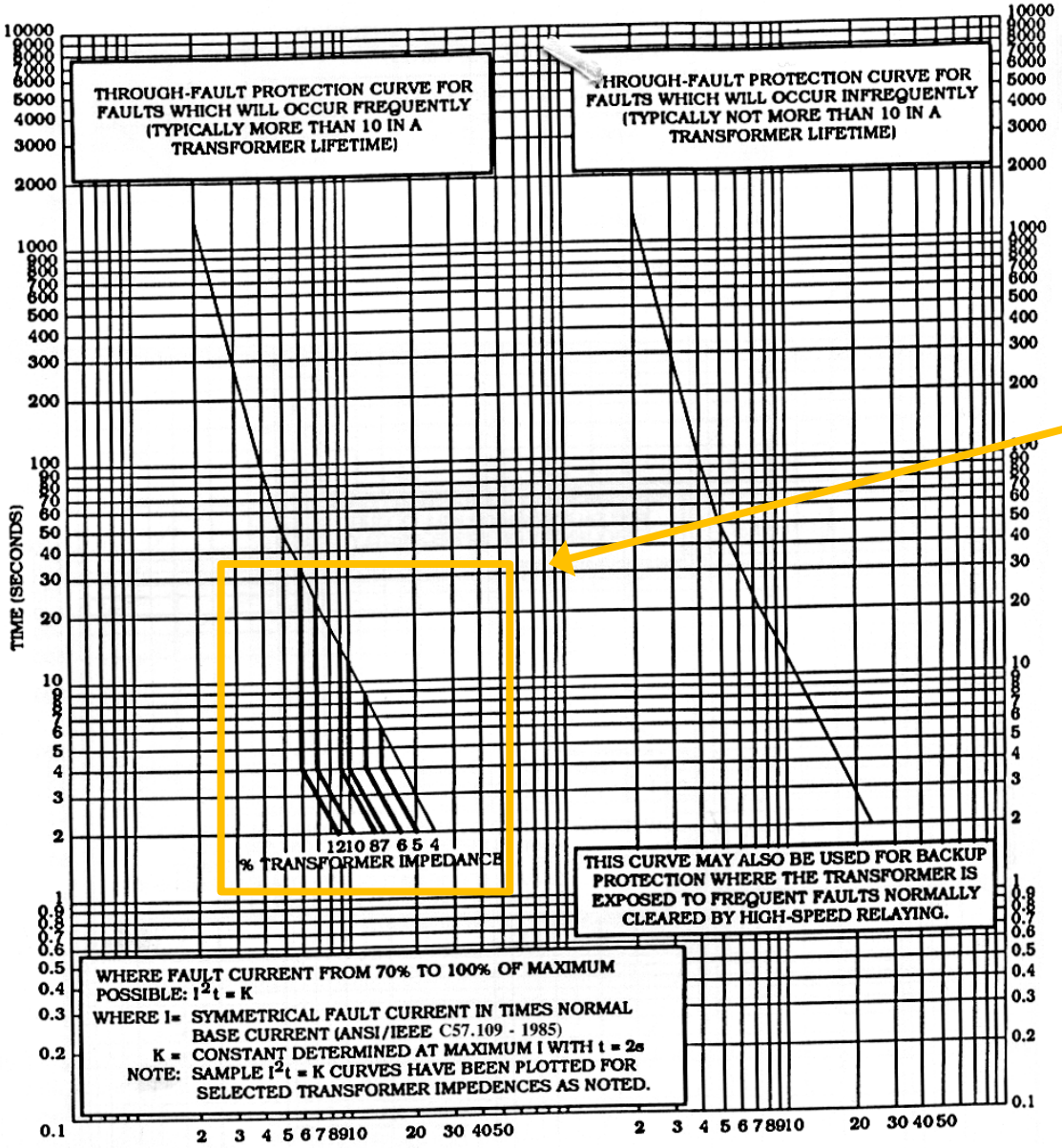

From IEEE C37.91

Through-Fault Category 2 (501 kVA – 5 MVA)

Through-Fault damage increases for a given amount of transformer Z%, as more I (I^2) through the Z results in higher energy (forces)

Cat. 2 & 3
Fault Frequency Zones
(501 kVA - 30 MVA)

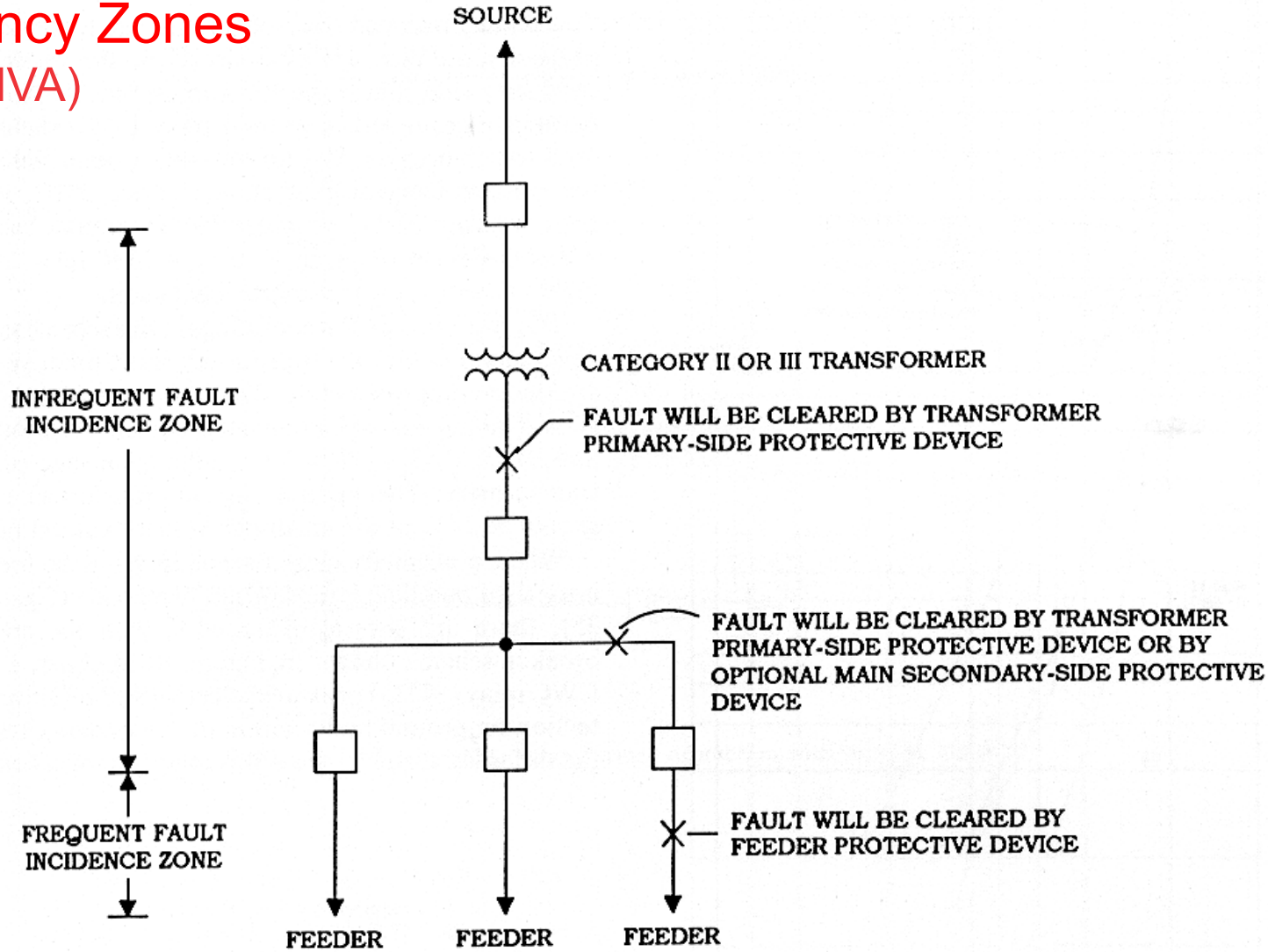

From IEEE C37.91

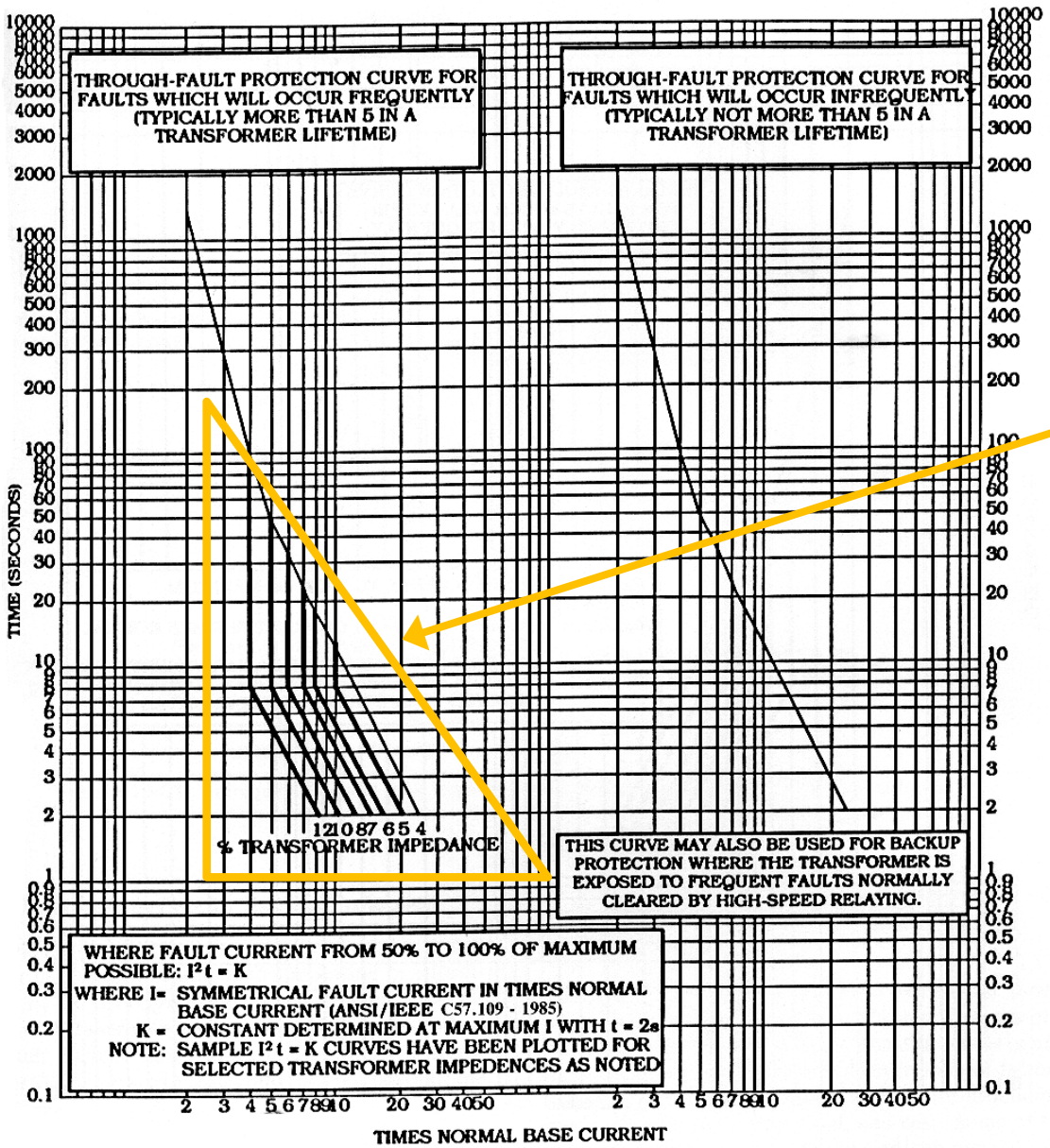

From IEEE C37.91

Through-Fault Category 3
5.001 MVA – 30 MVA

Through-Fault damage increases for a given amount of transformer Z%, as more I (I^2) through the Z results in higher energy (forces)

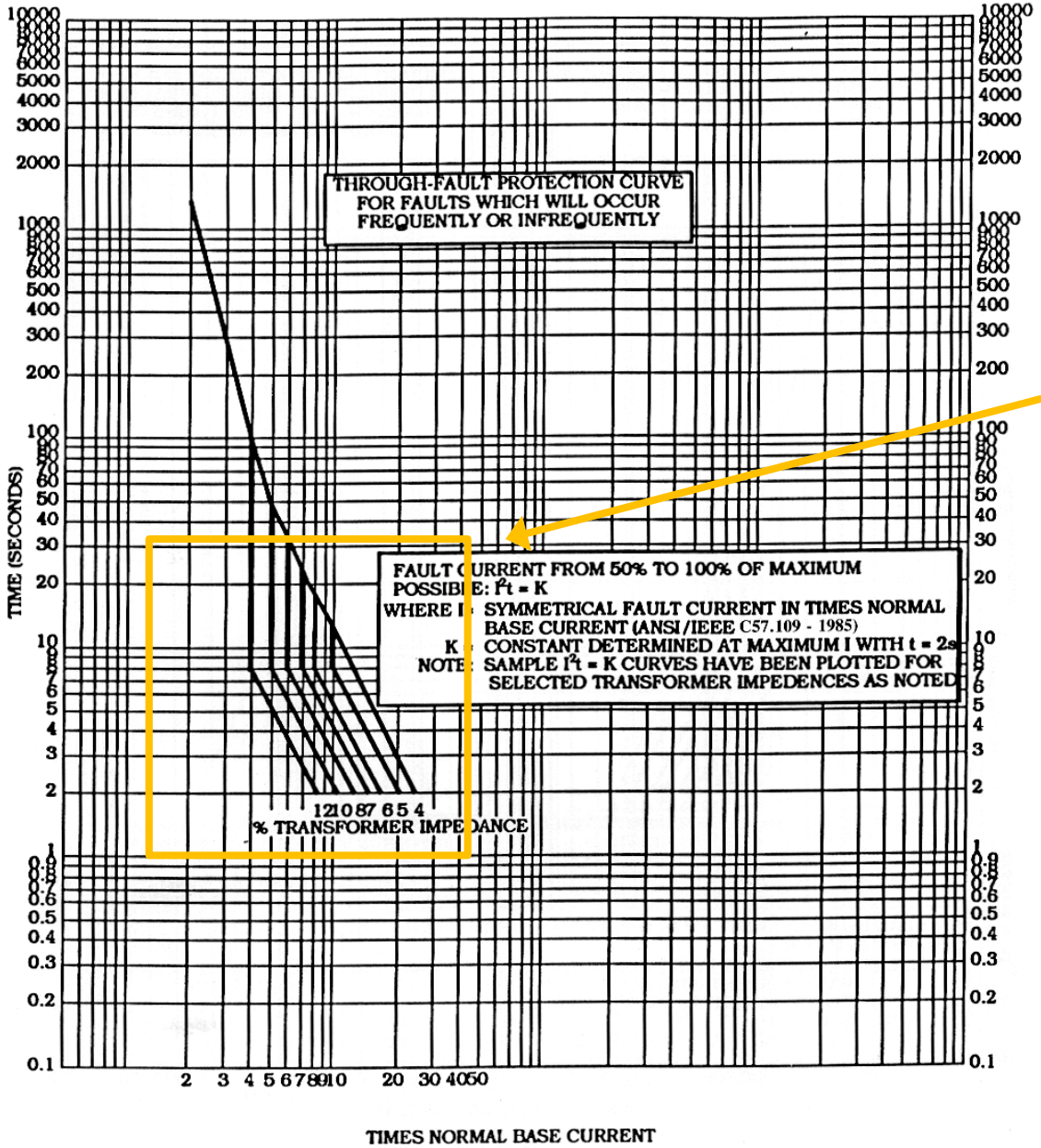

Through-Fault Category 4 (>30 MVA)

Through-Fault damage increases for a given amount of transformer Z%, as more I (I^2) through the Z results in higher energy (forces)

Current Summing & Through-Fault

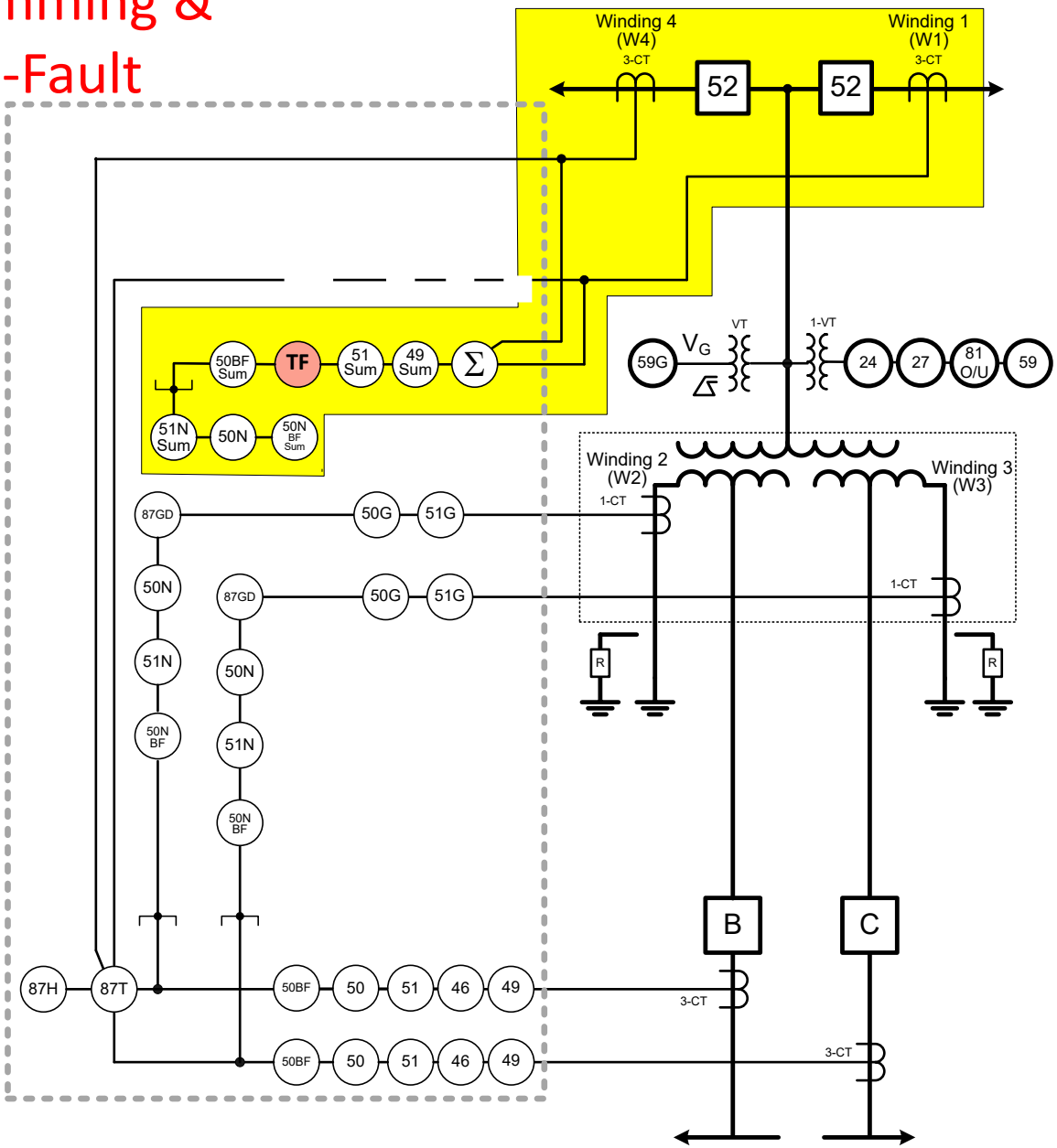

Through-Fault Function Settings (TF)

- Should have a current threshold to discriminate between mechanical and thermal damage areas
  - May ignore through-faults in the thermal damage zone that fail to meet recording criteria
- Should have a minimum through-fault event time delay to ignore short transient through-faults
- Should have a through-fault operations counter
  - Any through-fault that meets recording criteria increments counter
- Should have a preset for application on existing assets with through-fault history
- Should have cumulative I^2t setting
  - How total damage is tracked
- Should use inrush restraint to not record inrush periods
  - Inrush does not place the mechanical forces to the transformer as does a through-fault

Through-Fault Function Settings (TF)

Setup System

System | Output Settings | Input Settings

Settings

Nominal Voltage: 120 (60 – 140 (V))

Phase Rotation: ACB ABC

Demand Timing Method: 15 Minutes 30 Minutes 60 Minutes

V.T. Config: VAB VBC VCA VA VB VC

Current Summing 1: W1 W2 W3 W4

Current Summing 2: W1 W2 W3 W4

Enable/Disable Windings for 87 Function

More Than 2 Windings | Winding 1 and Winding 2 Only | Enable All Windings

TF: Through Fault

Through Fault Current Threshold: 50.0 (1.0 – 100.0 (A))

Through Fault Current Time Delay: 20 (1 – 8160 (Cycles))

Pickup Operation Limit: 2000 (1 – 65535 (Operations))

Cumulative I²T Limit: 500000 (1 – 1000000 (kA² Cycles))

Current Selection: Sum1 Sum2 W1 W2 W3 W4

Inrush Block by Even Harmonics: Disable Enable

Preset Cumulative I²T: 0.00 (0.00 – 1000000.00 (kA² Cycles))

Disable

Outputs: 1 2 3 4 5 6 7 8 9 10 11 12 13 14 15 16

Blocking Inputs: 1 2 3 4 5 6 7 8 9 10 11 12 13 14 15 16 17 18

Save | Cancel

Summary and Conclusions

- The operating principle and quantities for restraint and operate should be understood
- Analysis of internal and external faults with various fault current levels, offset and remanent flux levels can help determine settings
  - IEEE CT secondary circuit performance model
- The use of 2nd and 4th harmonics restraint can provide improved security for all types of inrush phenomena versus use of 2nd harmonic alone.

Summary and Conclusions

- The use of 5th harmonic restraint can be improved by raising the pickup when 5th harmonic from overexcitation is encountered
  - This enhances dependability from the typical employment of 5th harmonic restraint that blocks the differential element
- Overexcitation protection (V/Hz) should be employed on transformers
  - Voltage inputs required

Summary and Conclusions

- The use of ground differential to supplement phase differential provides improved sensitivity and dependability to detect ground faults in transformers
  - Directional supervision helps improve security
- Through-fault protection helps quantify the events so something can be done about them
  - Should employ supervisions to ensure true through-fault events are logged