Reducing Contingency-based Windfarm Curtailments through use of Transmission Capacity Forecasting

Doug Bowman
Southwest Power Pool

Jack McCall
Lindsey Manufacturing Co.

Minnesota Power Systems Conference
St Paul, MN
November 6-7, 2018

Background

- Within SPP is the 159.1 MW “Grand” windfarm
  - Output travels through 2 outlet transmission paths

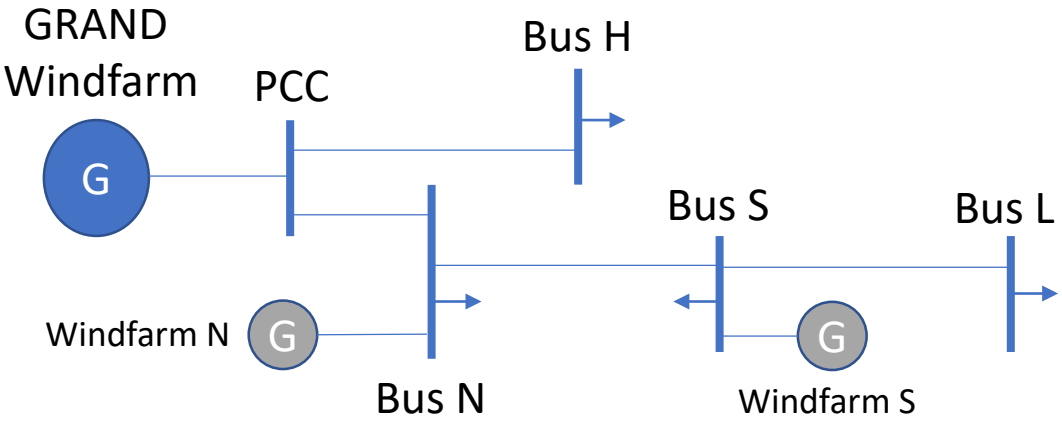

The Need for Curtailment

- Wind Integration Study showed with normal conditions and N-1 limits, one or the other line would become overloaded.

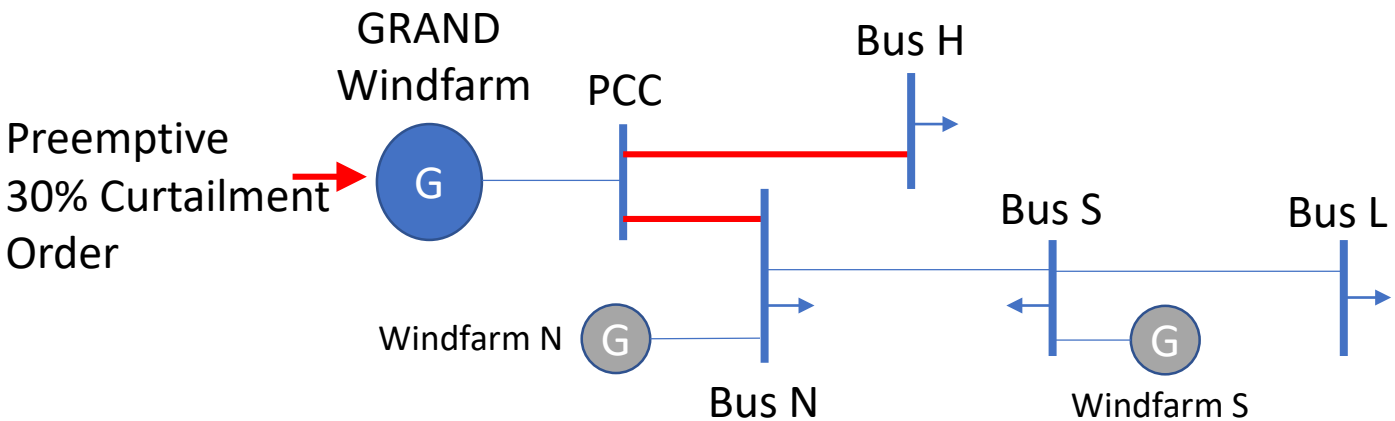

- To address these situations, up to 48.7 MW (~30%) of Grand's power production must be curtailed.

Initial Solution

- In the first three months after the curtailments were ordered, over 50,000MWh were curtailed.
  - Loss of over $1 million in revenue
  - Loss of over $1 million in production tax credits
- Grand's owner: this "hurts us, our off-taker and the market efficiency"
- Remedial Action Scheme (RAS) requested be put in place to reduce curtailments

Proposed Fast Reaction RAS Scheme

- Monitor the three N-1 lines (PCC-H, PCC-N, N-S)
- For any trip, immediately curtail 49.7MW of capacity
- SPP ensured the scheme would have minimal likelihood of mis-operation and had no unintended consequences.

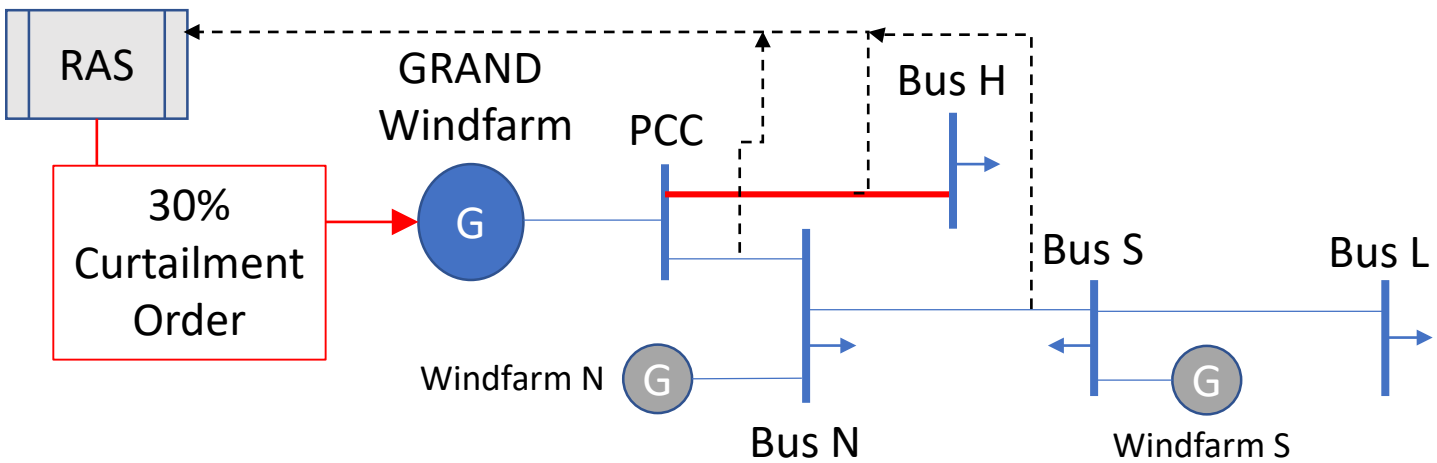

Approach Summary

- The Preemptive Order and the Reactive RAS did the same thing…
- Used curtailment to address N-1 conditions caused by:
  - Fixed capacity line capacity ratings, during

Approach Summary

- The Preemptive Order and the Reactive RAS did the same thing…
- Used curtailment to address N-1 conditions caused by:
  - Fixed capacity line capacity ratings, during
  - Periods of high wind farm output, resulting from

Approach Summary

- The Preemptive Order and the Reactive RAS did the same thing…
- Used curtailment to address N-1 conditions caused by:
  - Fixed capacity line capacity ratings, during
  - Periods of high wind farm output, resulting from
  - Windy conditions

Approach Summary

- The Preemptive Order and the Reactive RAS did the same thing…
- Used curtailment to address N-1 conditions caused by:
  - Fixed capacity line capacity ratings, during
  - Periods of high wind farm output, resulting from
  - Windy conditions

Is there another way?

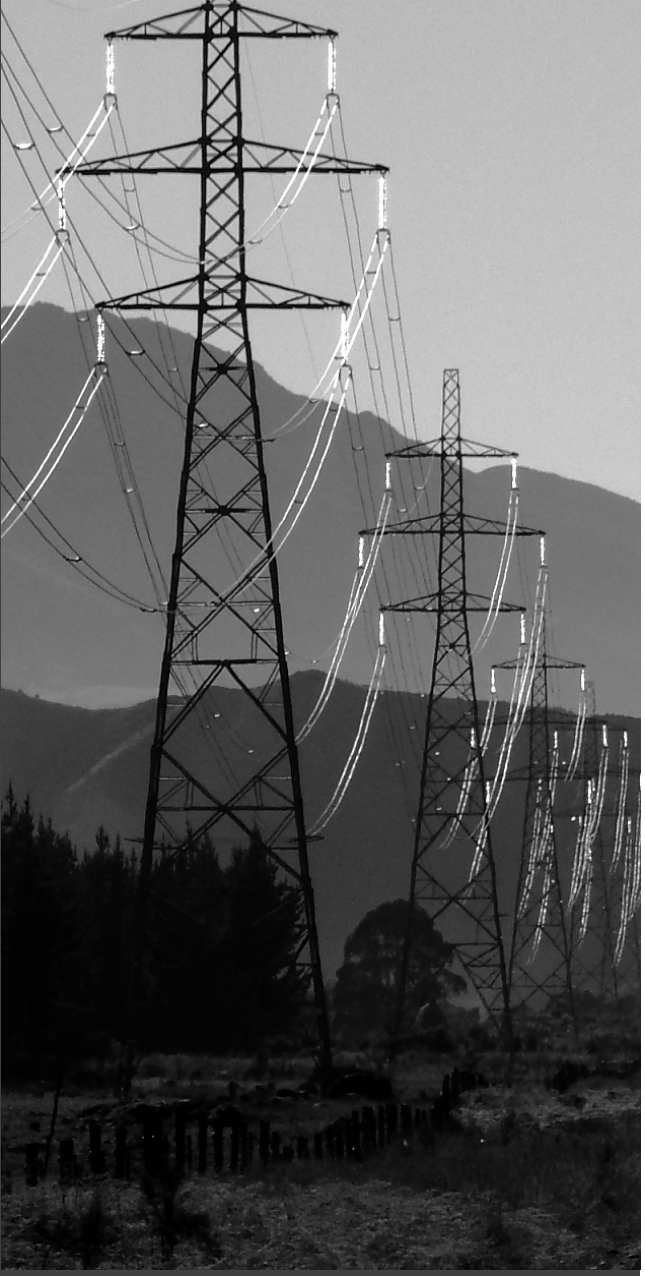

What limits line rating?

Clearance to Ground

- A line is not safe unless clearance is maintained
- Compliance requirements

Conductor Temperature

- Overheating leads to weakening and loss of life
- Premature replacement

What effects these parameters?

Weather.

Optimizing line capacity based on weather

- Line ratings (static) are based on conservative weather conditions
- **Seasonal Adjusted Ratings** and **Ambient Adjusted Ratings** recognize weather related effects on line capacity
  - Both adjust only on ambient temperature

Optimizing line capacity based on weather

- Line ratings (static) are based on conservative weather conditions
- **Seasonal Adjusted Ratings** and **Ambient Adjusted Ratings** recognize weather related effects on line capacity
  - Both adjust only on ambient temperature
- Wind has MUCH more impact than ambient
  - +2 mph wind ≅ 15°F change

Dynamic Line Rating

Decades of studies show +10-25% capacity availability 95% of the time

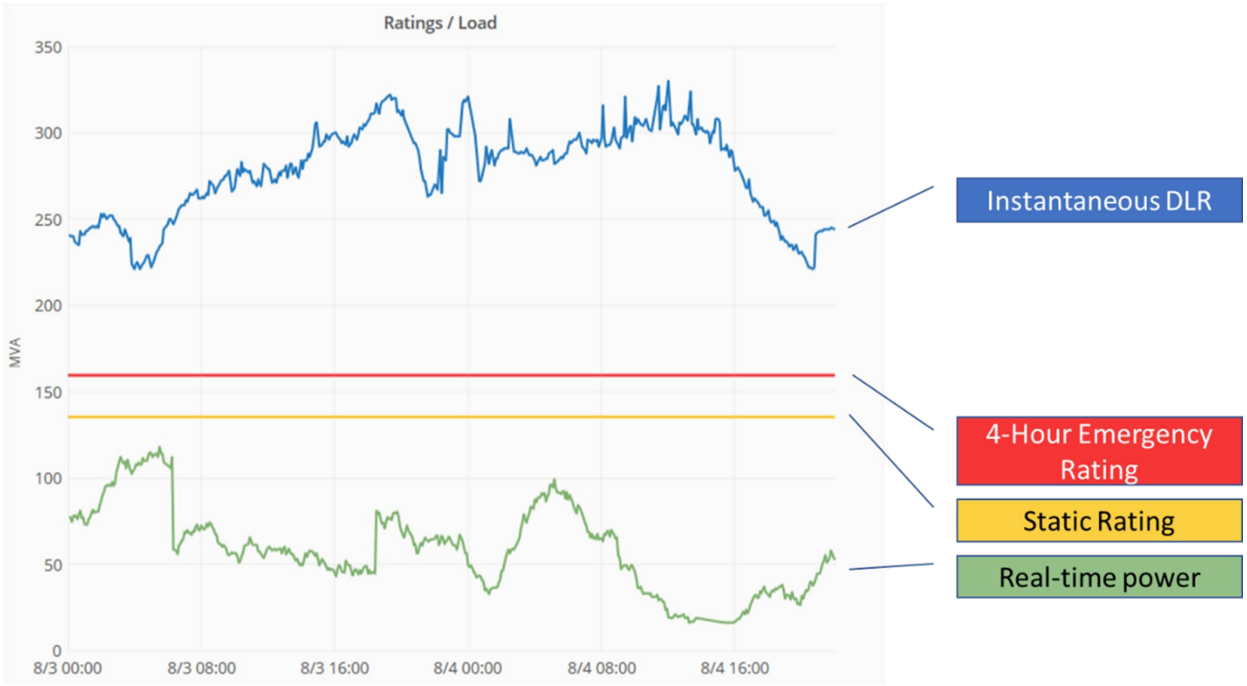

BUT, DLR

- Changes rapidly
- Changes erratically
- Is Real-time

Dynamic Line Rating

Decades of studies show +10-25% capacity availability 95% of the time

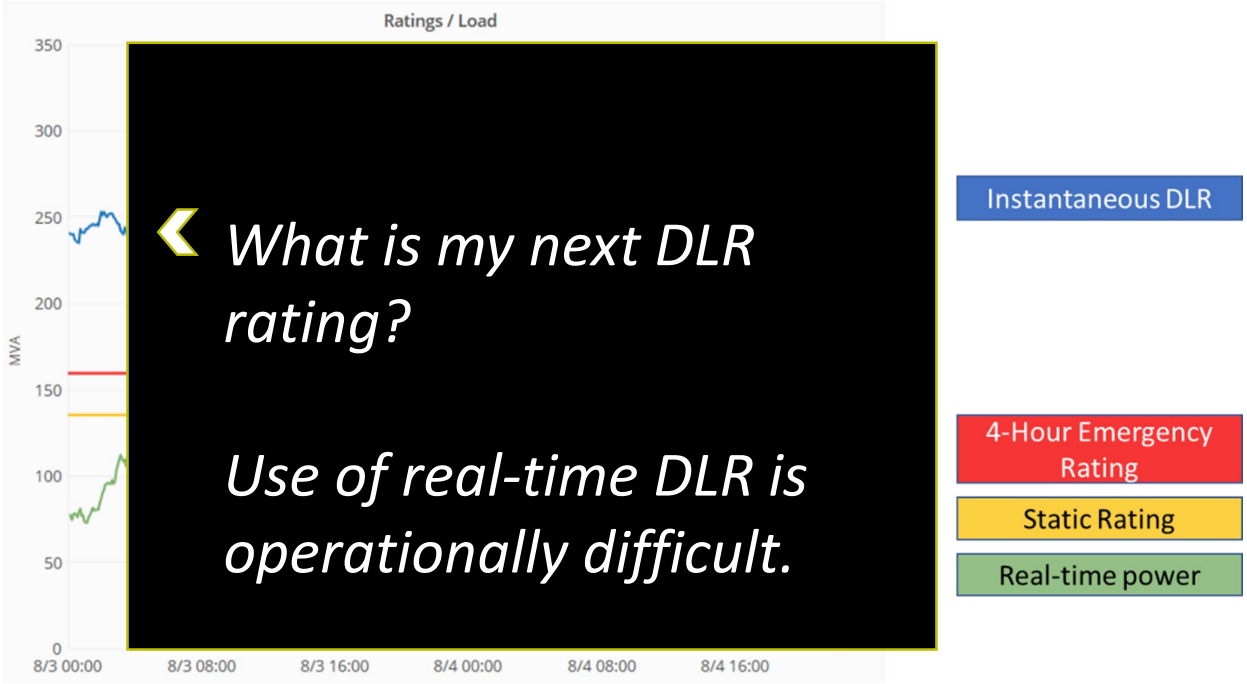

What is my next DLR rating?

Use of real-time DLR is operationally difficult.

BUT, DLR

- Changes rapidly
- Changes erratically
- Is Real-time

Dynamic Line Rating

Decades of studies show +10-25% capacity availability 95% of the time

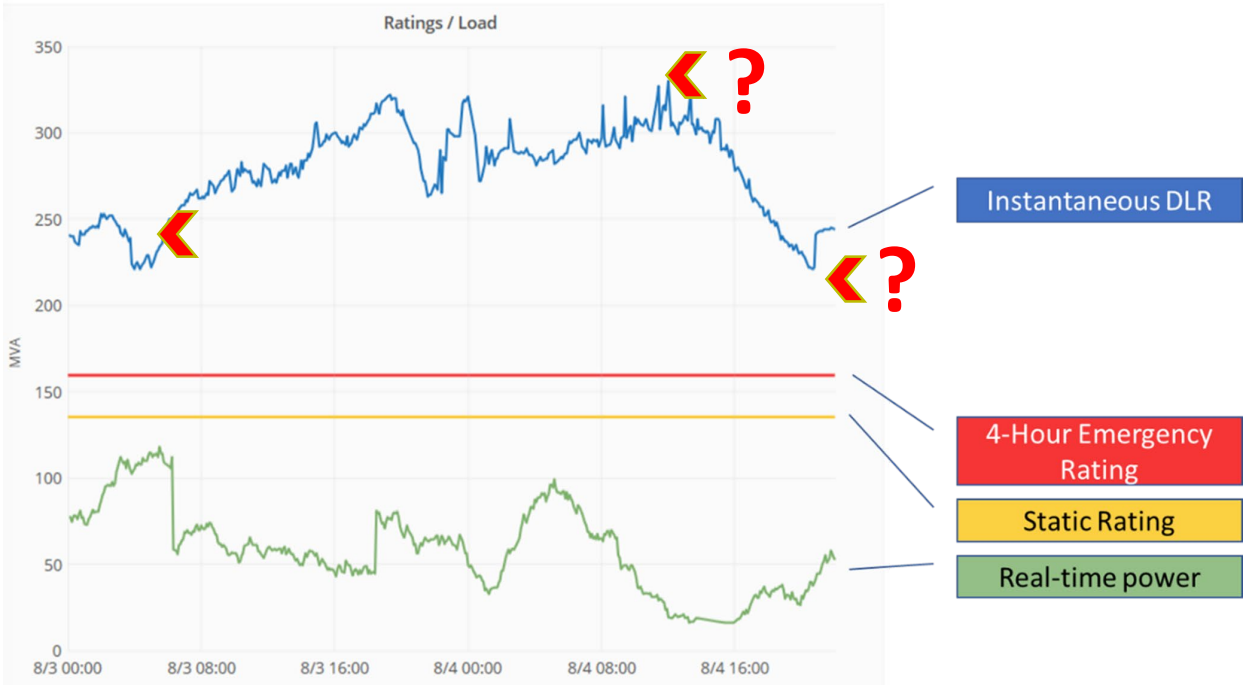

BUT, DLR

- Changes rapidly
- Changes erratically
- Is Real-time

Dynamic Line Rating

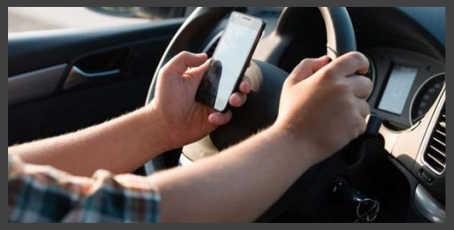

Like a map app in a traffic jam…

Dynamic Line Rating

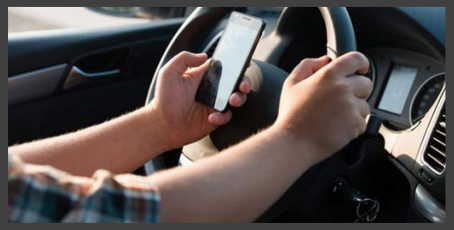

Like a map app in a traffic jam…

Highly accurate but useless.

<u>…Real-time is too slow</u>

Generation is FORECAST because it varies

Load is FORECAST because is varies

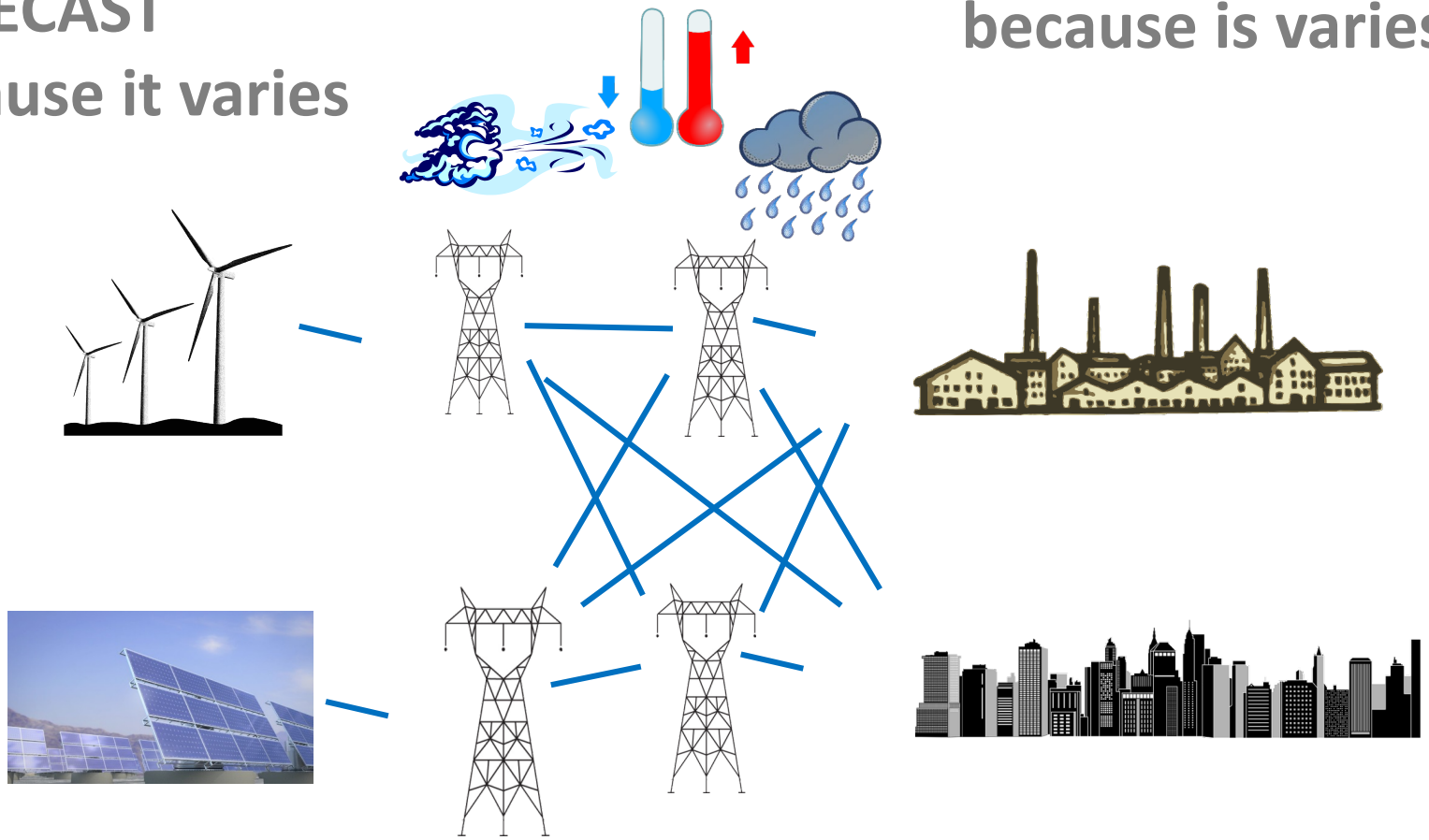

Generation is FORECAST because it varies

Load is FORECAST because is varies

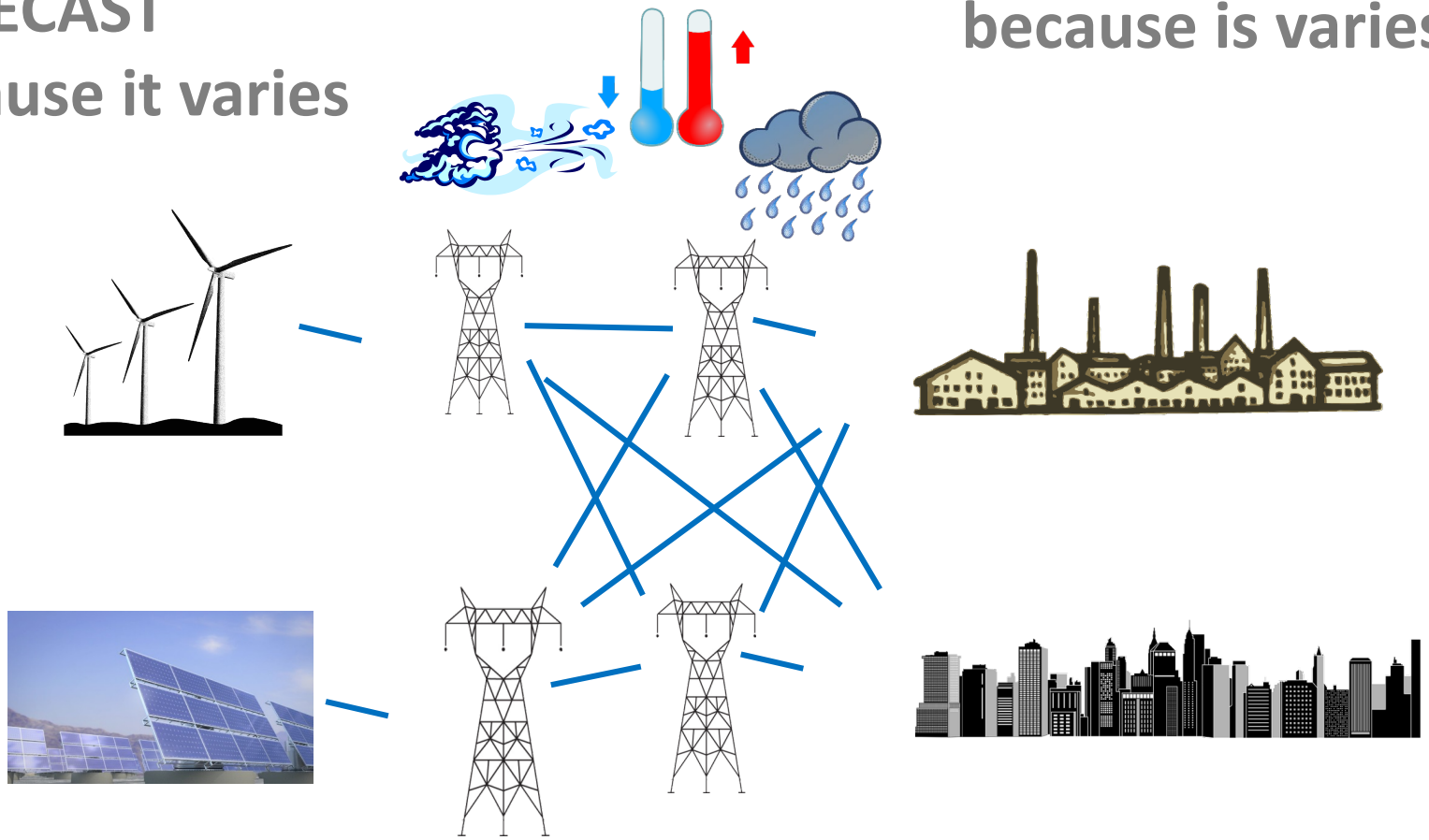

Yet transmission capacity is generally assumed as fixed

Transmission Capacity Forecasting

What is it?

- **An advanced statistical process that provides:**
  - Forecasts of transmission line capacity from 1-hour to 1-week ahead
  - Very high (98% or greater) confidence factors
  - Local line measurements avoids weather-only errors
- **Can provide direct EMS input**
- **Combines:**
  - Learning-based conductor behavior models
  - Continuous Forecasting

Transmission Capacity Forecasting

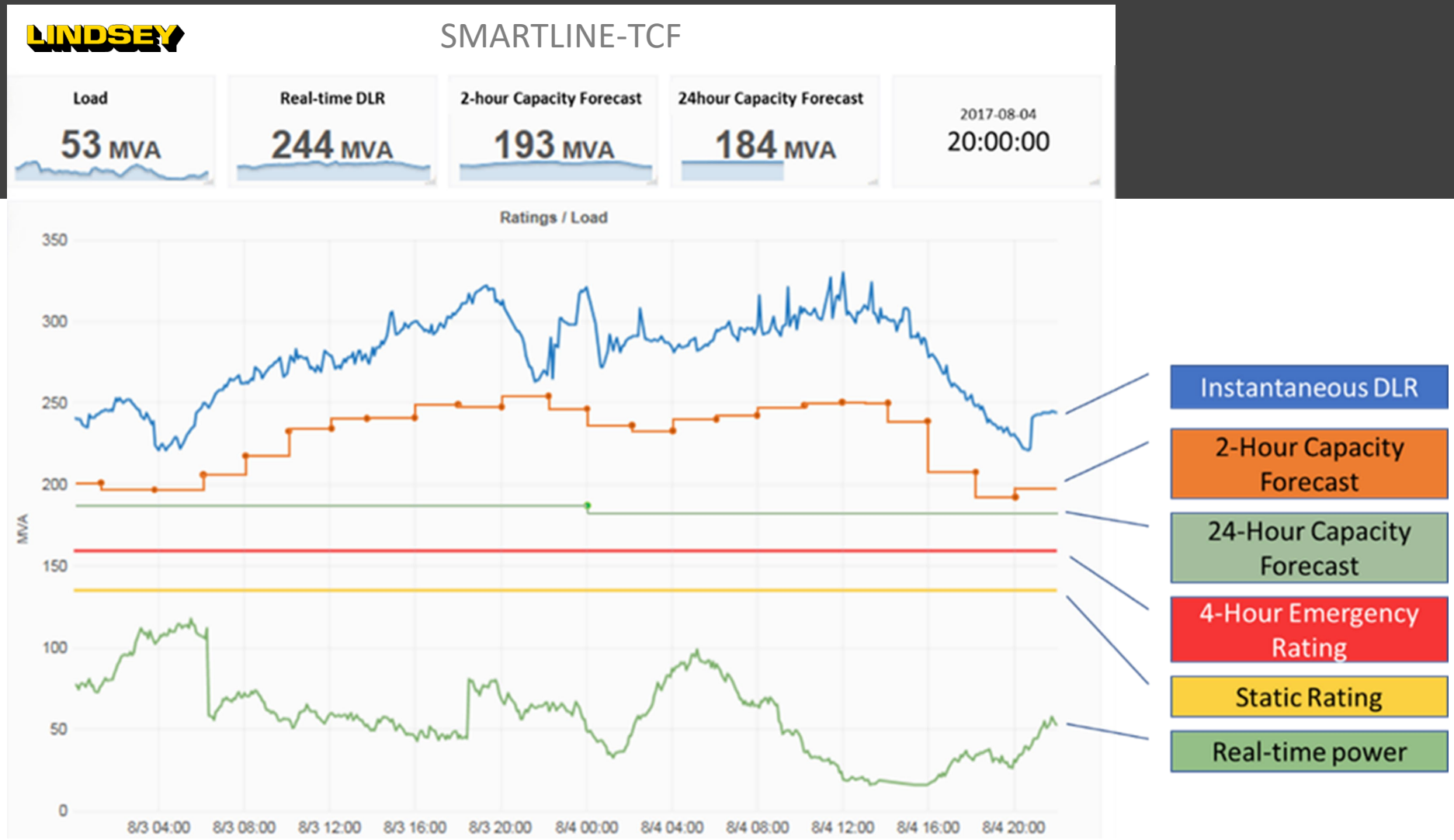

Is It Windy Enough for TCF to Work?

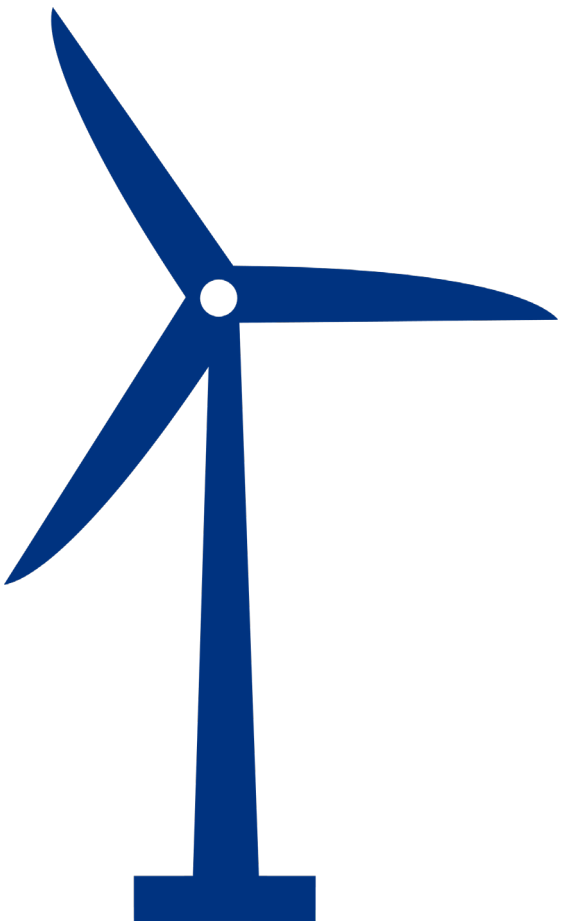

- The worse case line needs 147.4% of Static to avoid any curtailment.
- All lines are perpendicular to prevailing wind pattern, maximizing cooling effect
- Lowest Monthly Ave Wind is 3.3m/sec
- Ave Annual Wind Speed is 6.8 m/sec
- 3.0 m/sec (6.7mph) ground wind speed delivers 150% of line static rating
- Analysis shows 9.6 m/sec ground wind speed is needed to produce max wind farm output

TCF with Pre-Emptive Curtailment

A. Develop 36-hour ahead forecast of line capacities
   - Provides for 24-hour day ahead operation
   - Additional 12 hours for market setting and clearing activities

B. Take day ahead forecasted wind farm output to forecast flows on lines of concern during N-1

C. If A<B, then order pre-emptive curtailment

D. Alternatively, order a lower level curtailment to match A and B

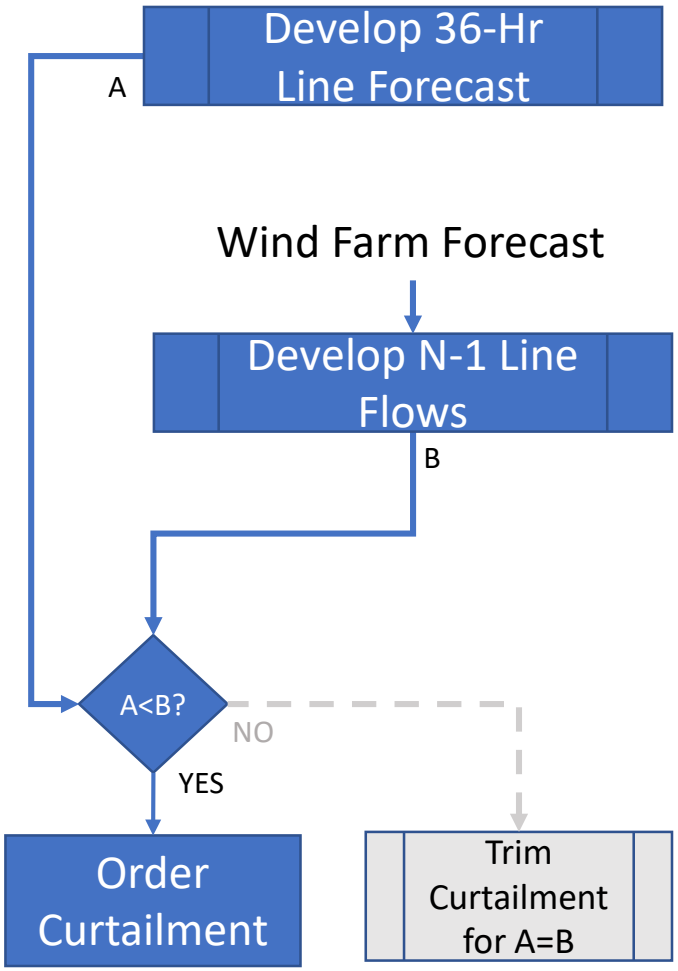

Supervising RAS Curtailment with TCF

Recall the RAS was to curtail within cycles of line trip

A. Develop 4-hour ahead forecast of line capacities

B. Take day ahead forecasted wind farm output to forecast flows on lines of concern during N-1

- If A>B, then **INHIBIT** curtailment IF an N-1 event occurs
- Refresh signals periodically to continue to inhibit or allow curtailment to be issued.

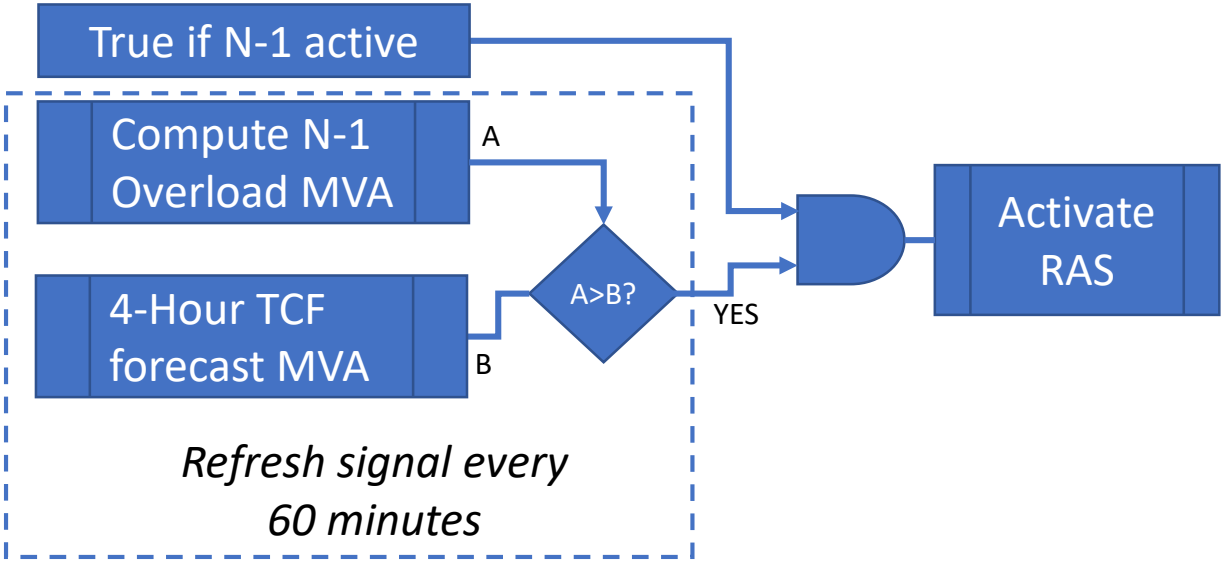

Enhancing RAS Curtailment with TCF

Recall the RAS was to curtail within cycles of line trip.

C. Develop <u>6-hour</u> ahead forecast of line capacities

- Check if A is close to the forecast flows on lines of concern during N-1
- If A≅B, then pre-emptively reduce wind farm output so that A>B to avoid initiating the instantaneous RAS curtailment in the event of a N-1 event

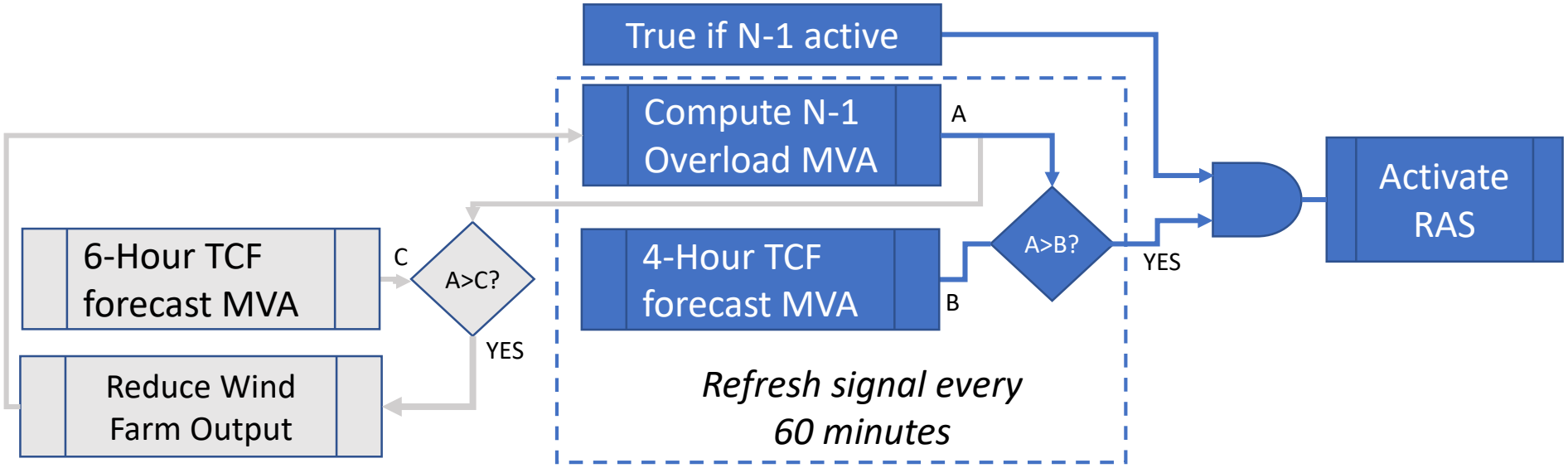

Who Pays | Who Benefits

Who Pays	Financial Benefit	Operational Benefit	Notes
TO	• If NITS, None • If not, transmission revenue	Enhancement to asset capabilities	Possible addition to rate base
RTO	None; Not able to pay	• Great situational awareness • More flexibility in power export • Less congestion	Must socialize cost if RTO orders the installation
WF	• Energy sales • PTC	Less wear and tear on equipment due to curtailment	Must negotiate with TO to install and operate to forecasted levels

Summary

- TCF systems can effectively address transmission constraints that result in wind farm curtailment
  - Can supplant and/or enhance traditional curtailment methods
- Allocating costs of deploying and integrating TCF systems is not well defined
- TCF systems, once installed, provide additional operation benefits to wind farm operators, TOs and RTOs
- Changes fixed transmission assets to dynamic